Catalog 2019

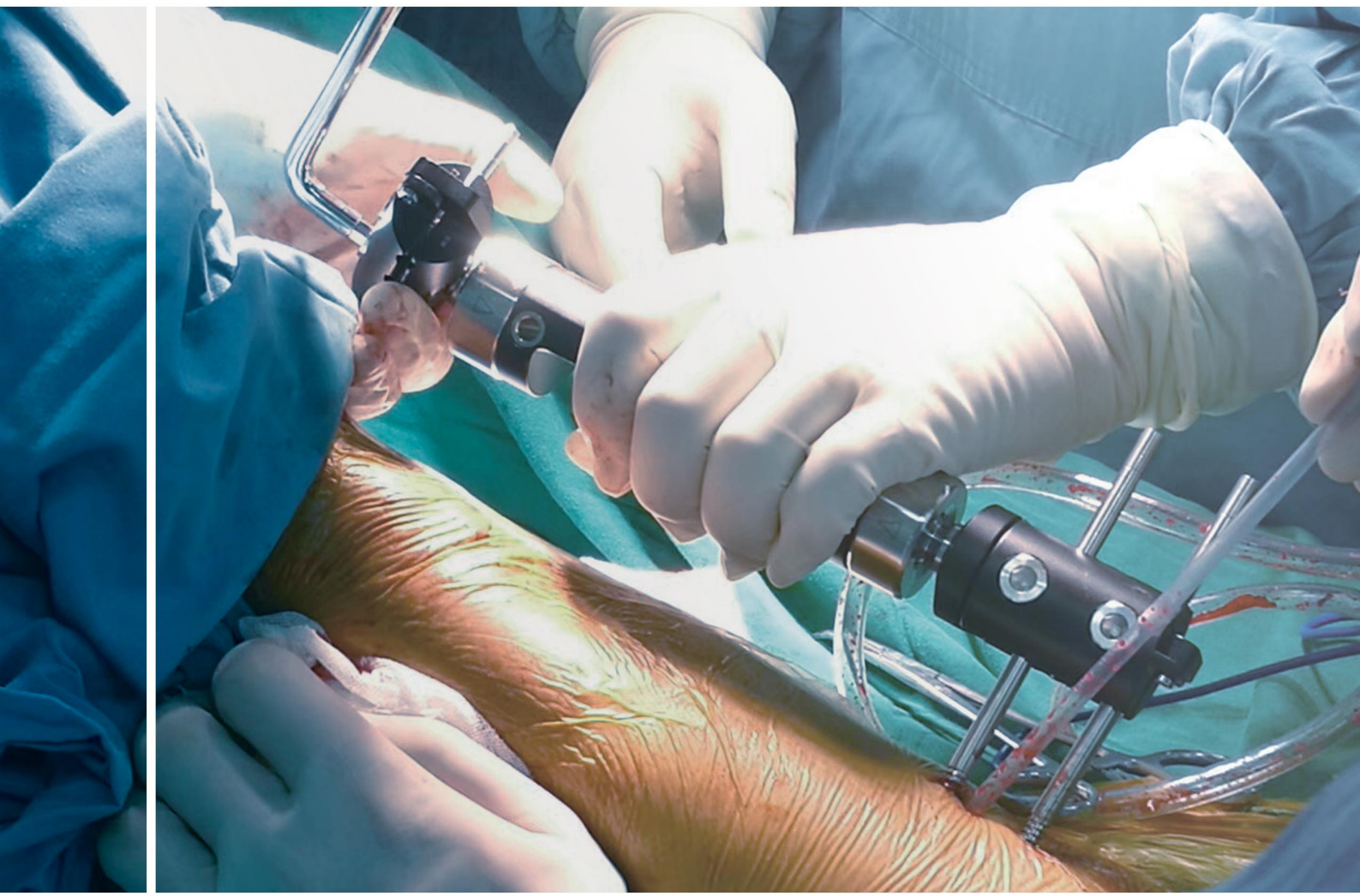

Dedicated to external fixation.

BFIX™

External Fixation System

Aike(Shanghai) Medical Instrument Co., Ltd.

Peek Fixator

1

2

3

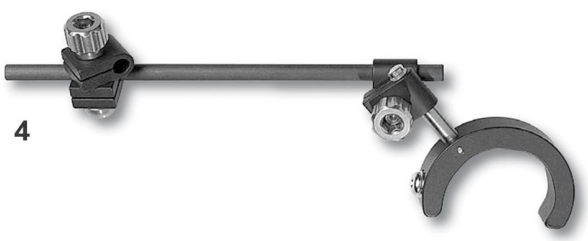

4

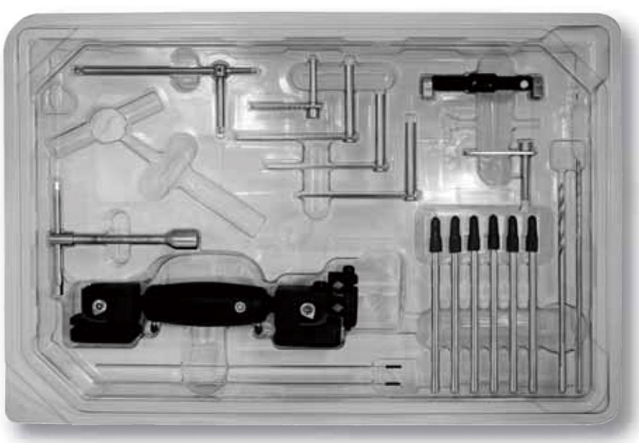

5

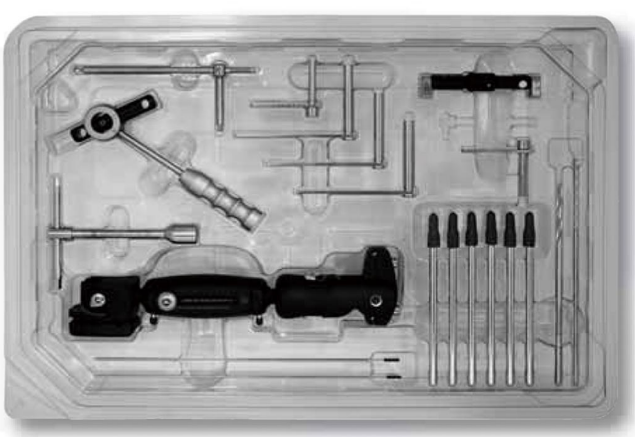

6

Peek Kit Complete,Sterile

1 DA21
XDH-D123-2 Metaphyseal Kit Sterile, Radiolucent

2 DA21
XDH-D124-2 Ankle Kit Sterile,Radiolucent

3 DA21
XDH-D126-2 Hybird Kit Sterile,Radiolucent
Note:Used together with Rings

4 DA21
D1022 Additional Screw Holder

5 DA21
XDH-D123-1 Radiolucent Metaphyseal complete kit,sterile

6 DA21
XDH-D124-1 Ankle complete kit,sterile

Micro Movement Fixator

Together with Compression-Distraction Unit,6mm Allen key

"()"means applicable

1 DA1
D101 Micro Movement Fixator(L)
27.6cm between outermost screws when fixator fully closed: extends by 8cm

2 DA1
D102 Micro Movement Fixator(M)
23.6cm between outermost screws when fixator fully closed: extends by 4cm

3 DA1
D103 Micro Movement Fixator(S)
21.6cm between outermost screws when fixator fully closed: extends by 2cm

Ball-Jointed Modules

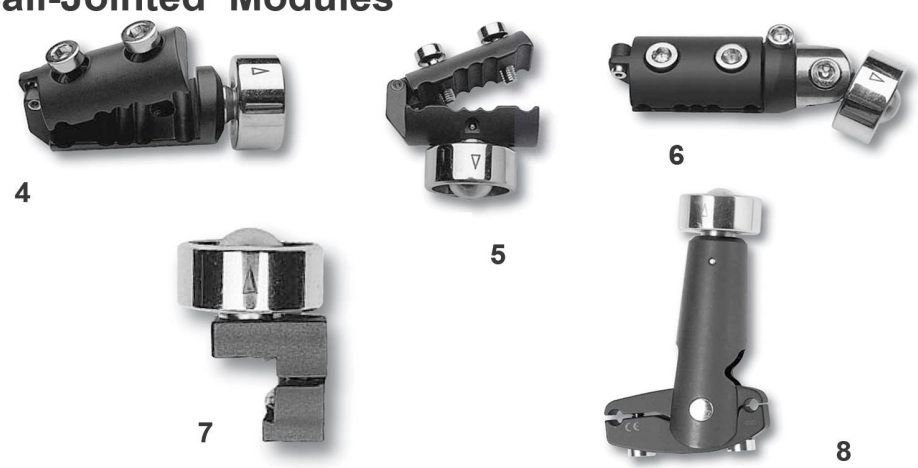

Optional Clamps

4 DA1001
D1001 Straight Clamp

5 DA2001
D1002 T Clamp

6 DA19001
D3001 Extended Range Clamp

7 ZA6001
H8001 Hybird Coupling with Ball-Joint

8 DA5001
D1004 Ankle Clamp

Micro Movement Fixator

1

2

3

4

5

6

1 DA2
D105 Micro Movement Fixator(Long)
T - Clamp(270-350)mm
D106 Micro Movement Fixator(Middle)
T - Clamp(230-350)mm
D107 Micro Movement Fixator(Short)
T - Clamp(210-230)mm

2 DA3
D109 Micro Movement Fixator(Long)
Metaphyseal - Clamp (300-380mm)
D110 Micro Movement Fixator(Middle)
Metaphyseal - Clamp (260-300mm)
D111 Micro Movement Fixator(Short)
Metaphyseal - Clamp (240-260mm)

3 DA4
D112 Micro Movement Fixator(Long)
BGT - Clamp (270-350mm)
D113 Micro Movement Fixator(Middle)
BGT - Clamp (230-270mm)
D114 Micro Movement Fixator(Short)
BGT - Clamp (210-230mm)

4 DA5
D121 Micro Movement Fixator(Long)
Ankle - Clamp (340-420mm)
D115 Micro Movement Fixator(Middle)
Ankle - Clamp (300-340mm)
D116 Micro Movement Fixator(Short)
Ankle - Clamp (280-300mm)

5 DA6
D122 Micro Movement Fixator(Long)
Angled - Clamp (310-390mm)
D117 Micro Movement Fixator(Middle)
Angled - Clamp (270-310mm)
D118 Micro Movement Fixator(Short)
Angled - Clamp (250-270mm)

6 DA2
D135 Self - Aligning Articulated Fixator(Long)
D136 Self - Aligning Articulated Fixator(Middle)
D137 Self - Aligning Articulated Fixator(Short)

Ball-Jointed Modules

1

2

3

4

5

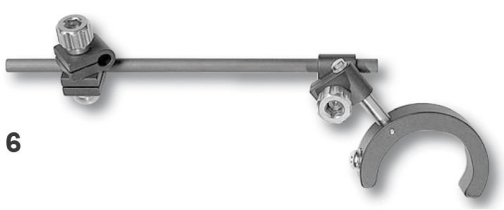

6

7

8

1 DA3001
D1021 Metaphyseal Clamp

2 DA4001
D1020 B.G.T Clamp

3 DA6001
D1005 Angled Clamp

4
D1009 Double-Coupling Clamp

5 G18003
Radiolucent Ankle Guide

6
D1022 Additional Screw Holder

7
D1113-1 Articulated Body for the Hip(L)
D1114-1 Articulated Body for the Hip(M)
D1115-1 Articulated Body for the Hip(S)

8
D1120
Self-aligning Articulated Body(L)
D1121
Self-aligning Articulated Body(M)
D1122
Self-aligning Articulated Body(S)

Components/Replacements

1

2

3

4

5

6

Instrumentation

7

8

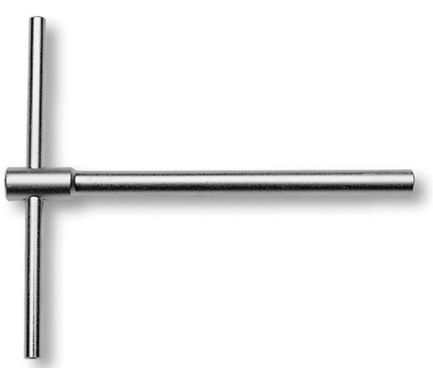

9

1 DA1002
Central Bodies
D1010 Large
D1011 Middle
D1012 Small

2
D102-010
Compression-Distraction
Unit Silicone O-Rings(pack of 10)

3
D1102 Bush

4
D1101 Cam

5 DA1003
D1016 Distractor(L) 8cm
D1017 Distractor(M) 4cm
D1018 Distractor(S) 2cm

6 DA1003
D1216 Micromovement Actuator(L)
D1217 Micromovement Actuator(M)
D1218 Micomovement Actuator(S)

7
G10017 Allen Wrench 6mm

8
G30017 Allen Wrench 5mm

9
G11000 T-Wrench 6mm

Paediatric Fixator

1

2

Ball-Joint Modules

3

4

5

6

7

8

9

10

1 DA1
D104 Paediatric Fixator(middle)

2
G30017 Allen Wrench 5mm

3 DA1001
D1007 Paediatric Straight Clamp

4 DA2001
D1008 Paediatric T Clamp

5
D1105 Paediatric Double Coupling Clamp

6 DA1005
D1104 Bush

7
D1013 Central Bodies

8
D1019 Distractor 2.75cm

9 DA1004
D1103 Cam

10 DA2
D108 Paediatric Fixator T - Clamp

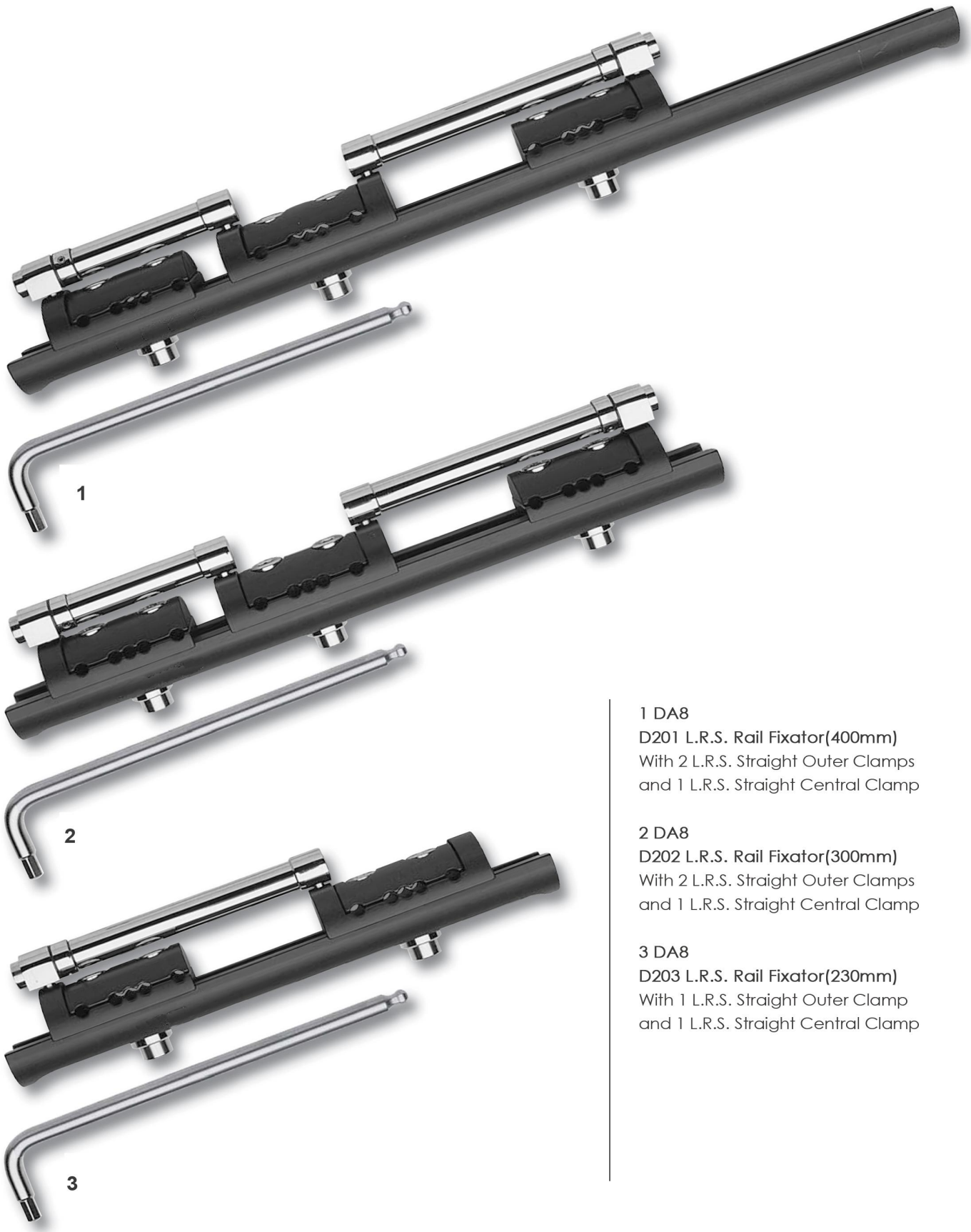

1 DA8
D201 L.R.S. Rail Fixator(400mm)
With 2 L.R.S. Straight Outer Clamps
and 1 L.R.S. Straight Central Clamp

2 DA8
D202 L.R.S. Rail Fixator(300mm)
With 2 L.R.S. Straight Outer Clamps
and 1 L.R.S. Straight Central Clamp

3 DA8
D203 L.R.S. Rail Fixator(230mm)
With 1 L.R.S. Straight Outer Clamp
and 1 L.R.S. Straight Central Clamp

Components/Replacements

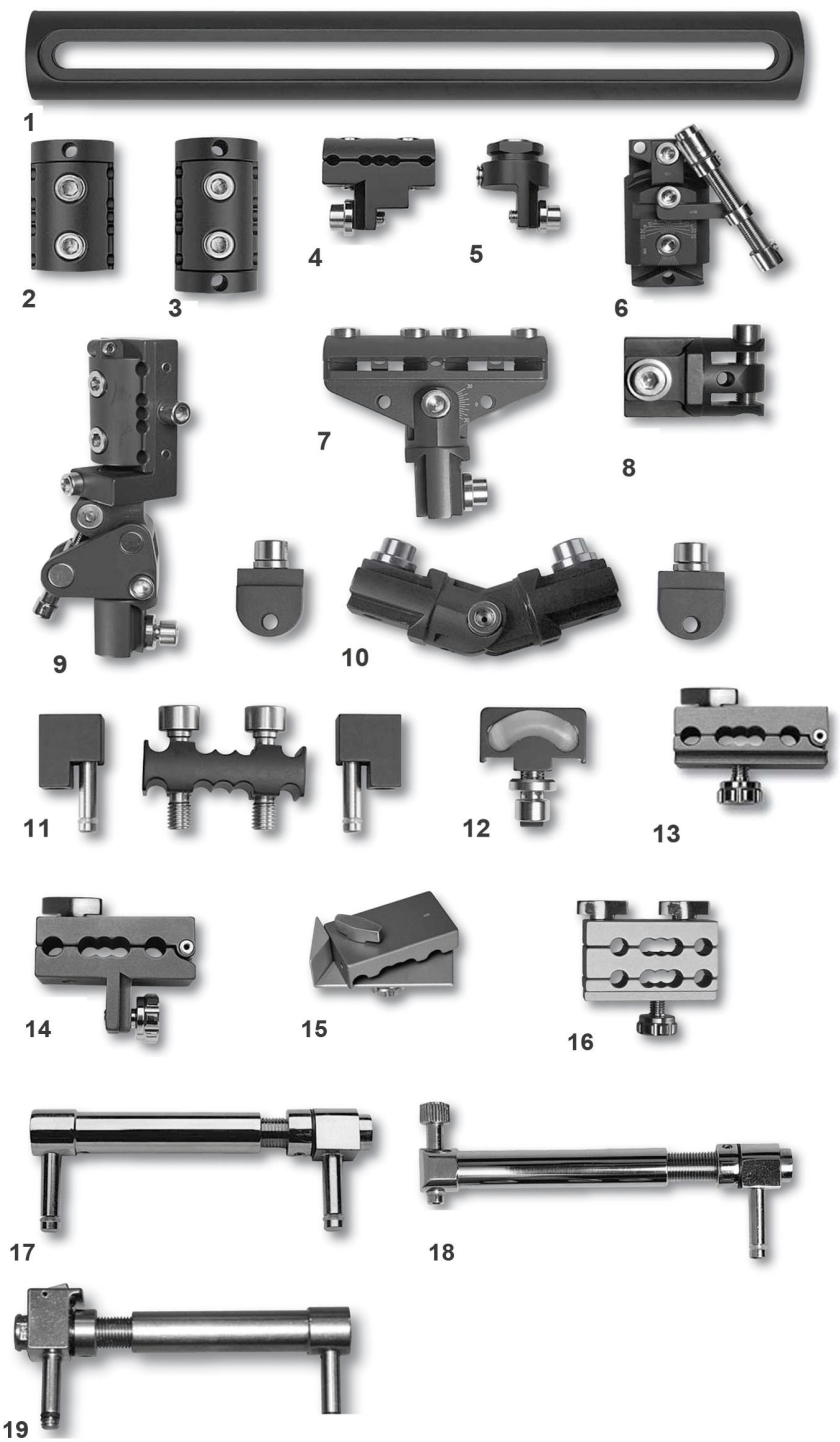

Instrument

1 DA8001
D2001 L.R.S. Rails(L) 400mm
D2002 L.R.S. Rails(M) 300m
D2003 L.R.S. Rails(S) 230mm

2 DA8003
D2013 L.R.S. Straight Outer Clamp

3 DA8002
D2014 L.R.S. Straight Central Clamp

4 DA1001
D2015 L.R.S. T-Clamp

5 ZA6006
D2016 L.R.S. Ball-Joint Coupling

6 DA11001
D2019 L.R.S. Micrometric Swivelling Clamp

7
D2035 L.R.S. Of-G T-Clamp

8
D2040 Of-G Clamp Coupling

9
DA12001
D2021 L.R.S. Multiplanar Clamp

10
D2029 L.R.S. Hinged Rail Coupling

11
D2023 Sandwich Clamp(8mm)
D2022 Sandwich Clamp(15mm)

12
D2017 Dynamic Unit

13
D2043 L.R.S. Straight Clamp Template

14
D2045 L.R.S. T Clamp template

15
D14116 L.R.S. Swivelling Clamp Template

16
D14147 L.R.S. Sandwich Clamp Template

17 DA1003
D1016 Compression-Distraction Unit(L)
D1017 Compression-Distraction Unit(M)
D1018 Compression-Distraction Unit(S)

18 D1027 Of-G
Compression&Distraction Unit

19
D1116 Distractor Advanced(L) 8cm
D1117 Distractor Advanced(M) 4cm
D1118 Distractor Advanced(S) 2cm

20
G10017 Allen Wrench 6mm

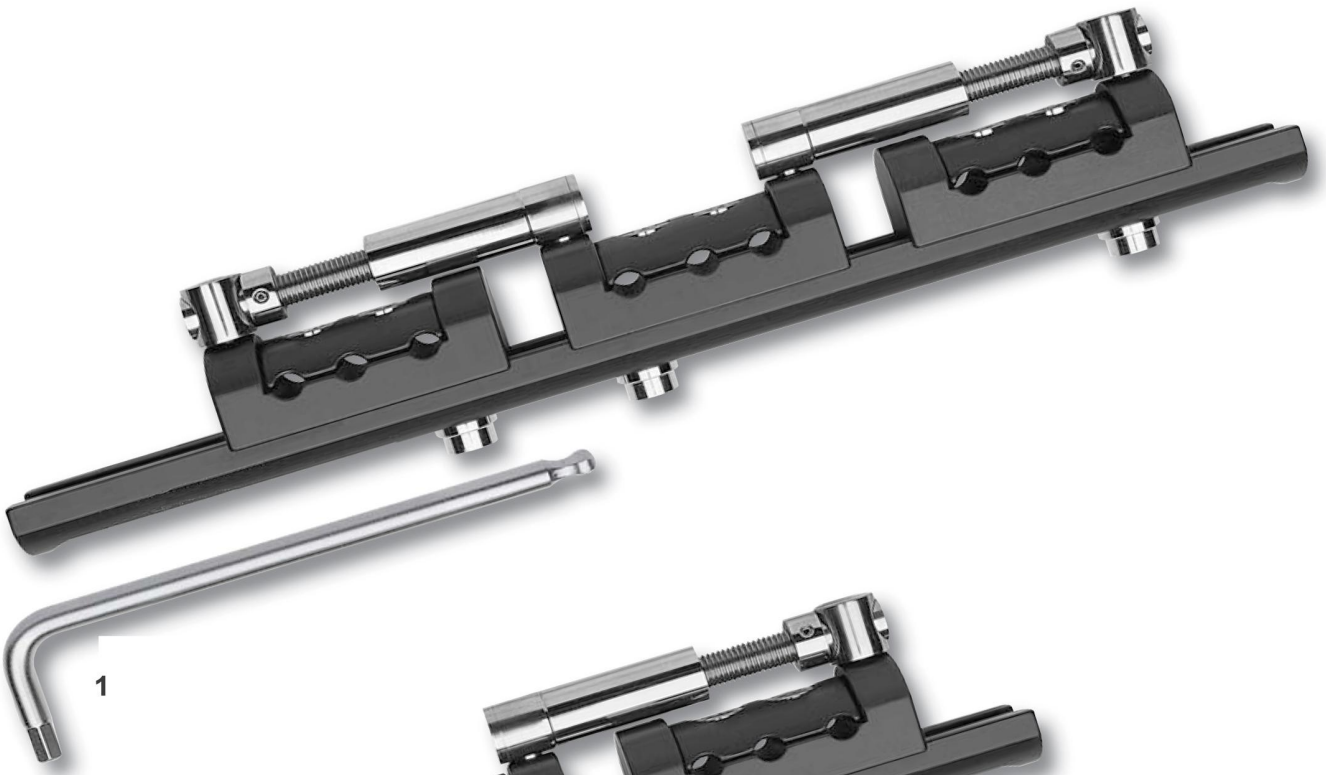

1

2

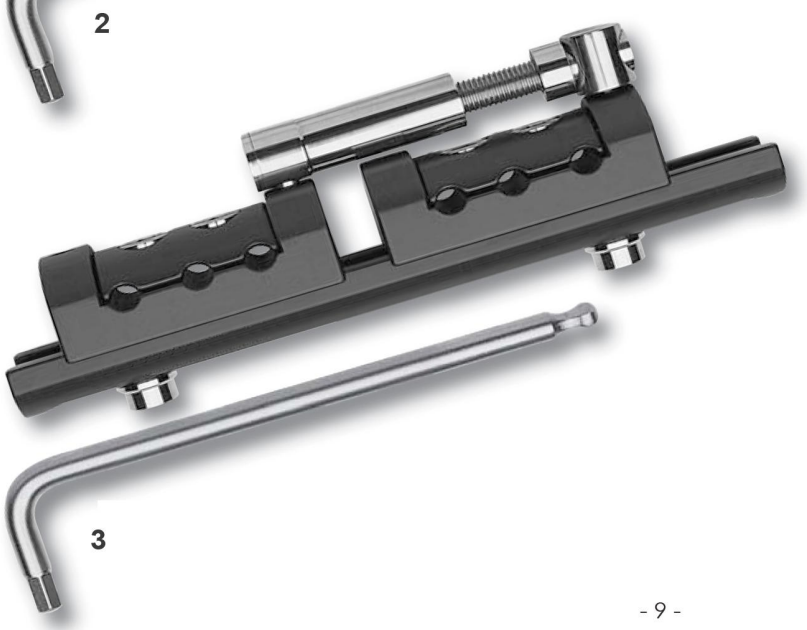

3

1 DA9
D204 paediatric L.R.S. Fixator(250mm)
With 3 Paediatric L.R.S. Straight Clamps

2 DA9
D205 paediatric L.R.S. Fixator(200mm)
With 2 Paediatric L.R.S. Straight Clamps

3 DA9
D206 paediatric L.R.S. Fixator(150mm)
With 2 Paediatric L.R.S. Straight Clamps

Components/Replacements

1

2

3

4

5

6

7

8

9

Instrument

10

1 DA9001
L.R.S. Rail
D2004 Long
Length 250mm

D2005 Middle
Length 200mm

D2006 Short
Length 150mm

2 DA9
D2025 Paediatric L.R.S. Straight Outer Clamp

3 DA9
D2047 Paediatric L.R.S. T-Clamp

4 DA9
D2028 Paediatric L.R.S. ball joining coupling

5
D2026 Paediatric L.R.S. Swivelling Clamp
Enables an appropriate Ball-jointed Module to be attached to the rail.

6
D2048 Paediatric Dynamic Unit

7
D1019 Paediatric Compression-Distraction Units

8
D2049 L.R.S. Straight Clamp Template

9
D2038 Paediatric L.R.S. Hinged Rail Coupling

10
G30017 Allen Wrench 5mm

Wrist Fixator

Components/Replacements

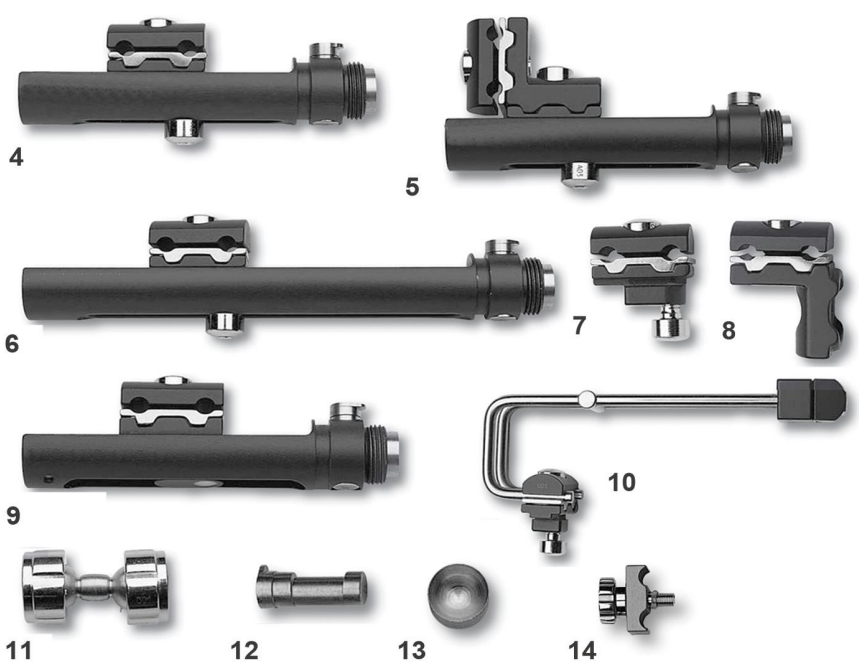

1 DA20
D401 Wrist Fixator 22m
Consisting of:1 Short Module with Straight Clamp,Cam and Bush,
1 Long Module with Straight Clamp, Cam and Bush and 1 Double Ball-Joint.

2 DA21
D402 Wrist Fixator (compression-distraction) 22mm
Consisting of:1 Long Module with Straight Clamp,Cam and Bush,
1 Compression-Distraction Module with Straight Clamp,Cam and Bush and 1 Double Ball-Joint.

3 DA22
D403 Wrist Fixator(extra-articular) 20mm
Consisting of:1 Short Module with T-Clamp,Cam and Bush,
1 Compression-Distraction Module with Straight Clamp,Cam and Bush, and 1 Double Ball-Joint

4
D4005 Wrist Fixator-Short Module
With Straight Clamp, Cam and Bush.

5
D4008 Wrist Fixator-Short Module
With T-Clamp, Cam and Bush

6
D4007 Wrist Fixator-Long Module
With Straight Clamp, Cam and Bush

7
D4004 Wrist Fixator-Straight Clamp

8 DA22002
D4001 Wrist Fixator-T-Clamp

9
D4006 Wrist Fixator-Compression-Distraction Module
With Straight Clamp, Cam and Bush

10
D4002 Wrist Fixator-Ulnar Outrigger Clamp

11
D4009 Wrist Fixator-Double Ball-Joint

12
D402-005 Wrist Fixator Cam

13
D402-011 Wrist Fixator Bush

14
D4011 Wrist Fixator-Template Conversion Clamp

Instrumentation

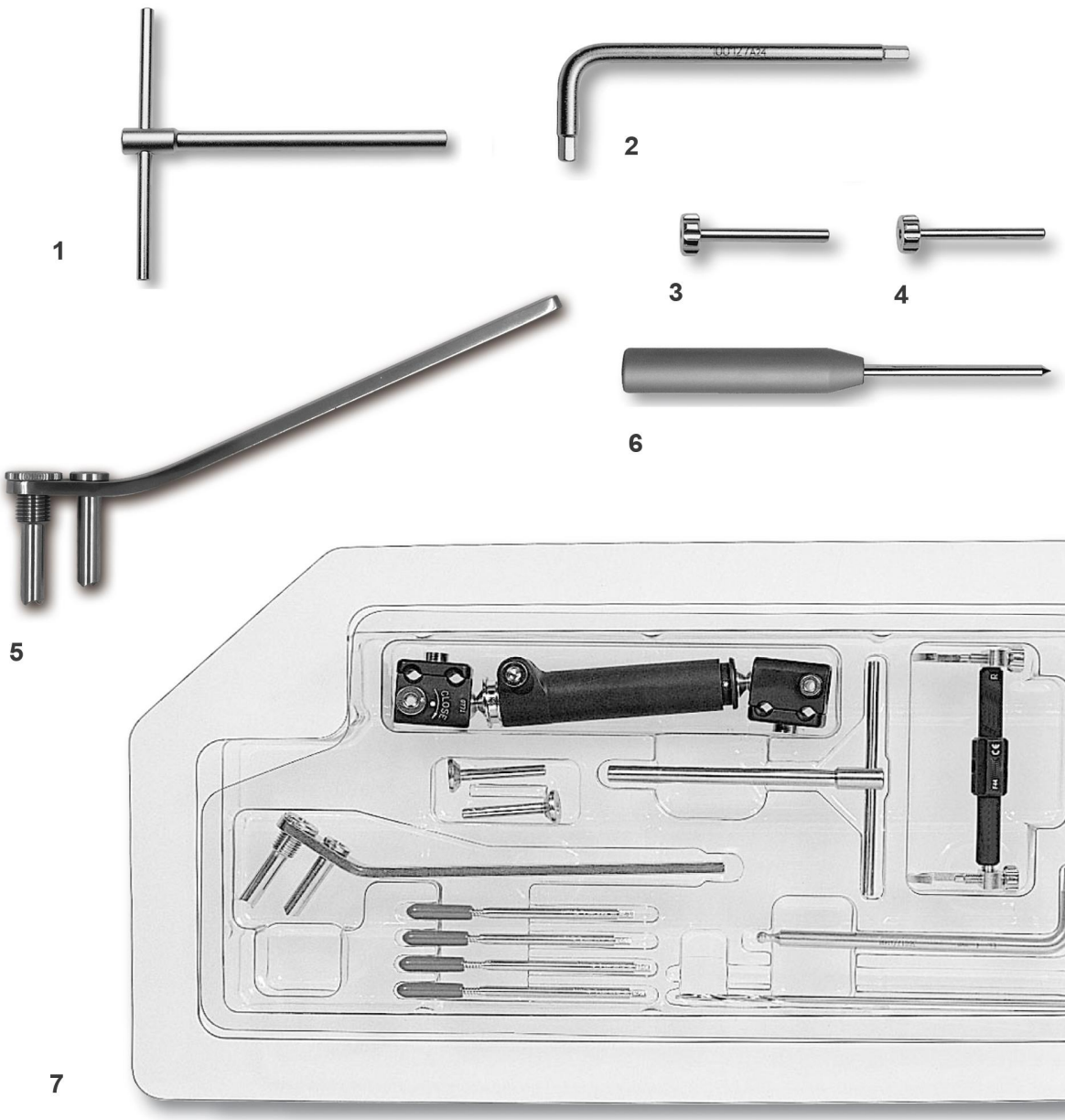

1
G21000 T-wrench
For 4mm Bone Screws

2
G10013 Allen wrench 4mm
G10012 Allen wrench 3mm

3
G13531 Drill Guide Ø2.0

4
G13532 Drill Guide Ø2.7

5
G13620 Template with handle

6
Tapered Trocar
G13540 Tapered trocar(for wrist fixator)

7
XDH-D125-1 Radiolucent Wrist Fixator Kit,Sterile
Consisting of: 1 Radiolucent Wrist Fixator, 1 Compression-Distraction Unit, 1 Allen Wrench 4 mm , 2 Drill Guides, 1 Drill Bit Ø 2.7mm , 1 Screw Template, 1 T-Wrench, 2 Self-drilling Screws, shaft Ø 4mm, thread Ø 3-3.3mm, total length 70 mm, thread length 20mm, 2 Self-drilling Screws, Shaft Ø 4mm, thread Ø 3.3-3 mm, total length 80mm, thread length 35mm and 4 Bone Screw Covers.

Mini Fixator

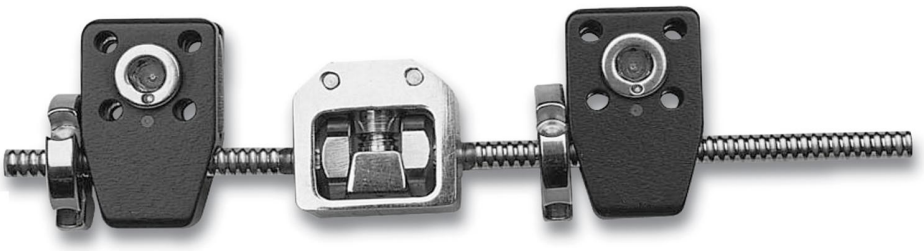

1

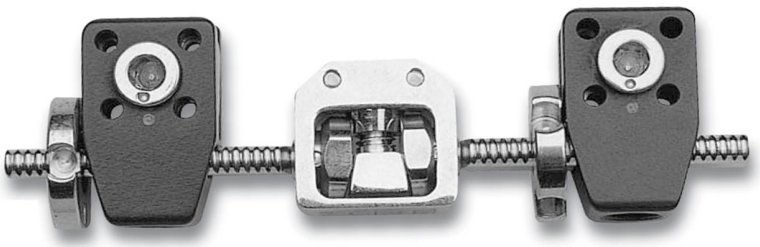

2

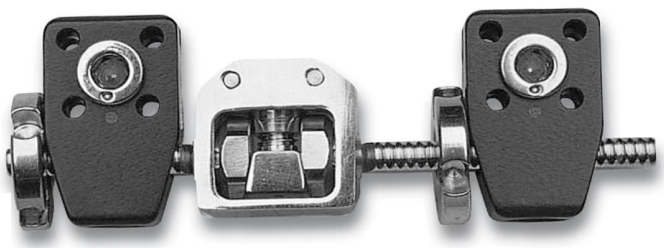

3

Components/Replacements

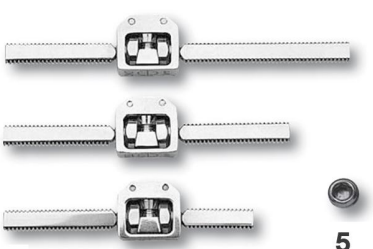

4

5

6

7

8

9

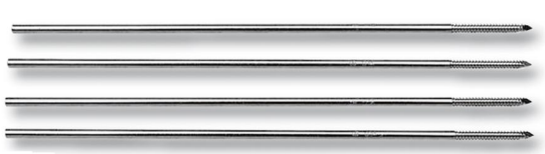

10

11

1 DA25
D501 Mini Fixator (85mm)
Consisting of: 1 Minifixator Long Body , 2 Minifixator Standard Clamps and 2 Minifixator Compression- Distraction Nuts .

2 DA25
D502 Mini Fixator (75mm)
Consisting of: 1 Minifixator Standard Body, 2 Minifixator Standard Clamps and 2 Minifixator Compression-Distraction Nuts.

3 DA25
D503 Mini Fixator (65mm)
Consisting of: 1 Minifixator Short Body, 2 Minifixator Standard Clamps and 2 Minifixator Compression-Distraction Nuts.

4 DA25
Minifixator Bodies
D5004 Long
(1 Long Bar and 1 Standard Bar; total length 85 mm).
D5005 Standard
(2 Standard Bars; total length 75 mm).
D5006 Short
(1 Standard Bar and 1 Short Bar; total length 65mm).

5
D501-005 Minifixator Clamp Locking Screw

6 DA25
D5003 Minifixator Standard Clamps (1 pair)

7 DA30
D5001 Minifixator L-Clamps(Left-Right)

8
D501-001 Minifixator Compression Distraction Nut.

9
G10012 Allen Wrench 3mm

10 SLO2015100
Threaded Wires Ø 2mm
Total length 100mm.
Thread length 15mm.

11
G14001 Reductor for Mini Fixator

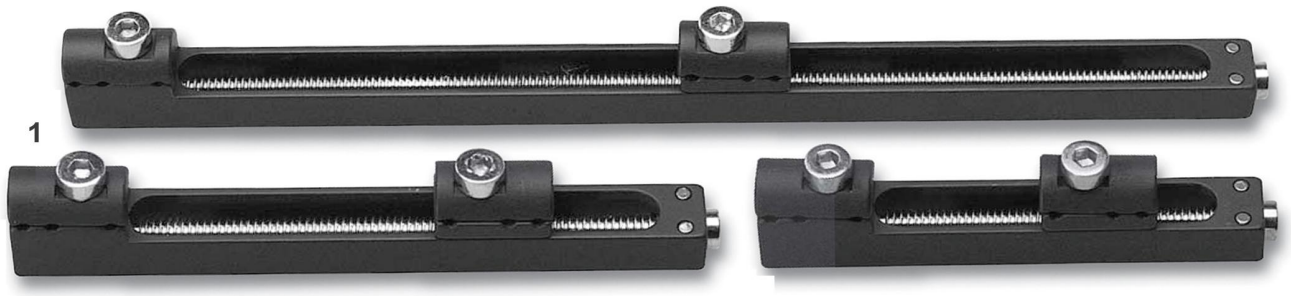

1

2

3

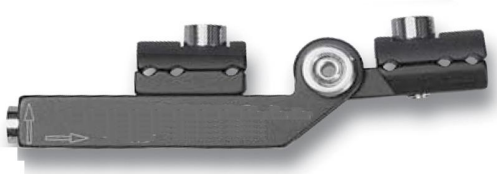

4

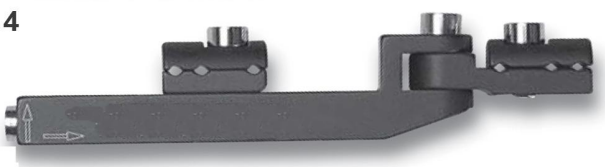

5

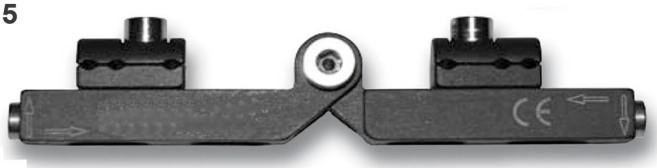

6

Instrumentation

7

8

9

1 DA26
D504 Minirail Fixator(170mm)

2 DA26
D505 Minirail Fixator(95mm)

3 DA26
D506 Minirail Fixator(70mm)

4 DA27
D507 Minirail Fixator(horizontal axis)
Allows articulation around an axis parallell to the bone screws.

5 DA28
D509 Minirail Fixator(vertical axis)
Allows articulation around an axis at vertical to the bone screws.

6 DA29
D511 Minirail Fixator(horizontal II)
Horizontal

7
G10012 Allen Wrench 3 mm

8
G20018 Ø2.0 Thumbwheel for K-Wire

9
G10022 3mm Ease Handle Wrench

Pelvic Fixator

1

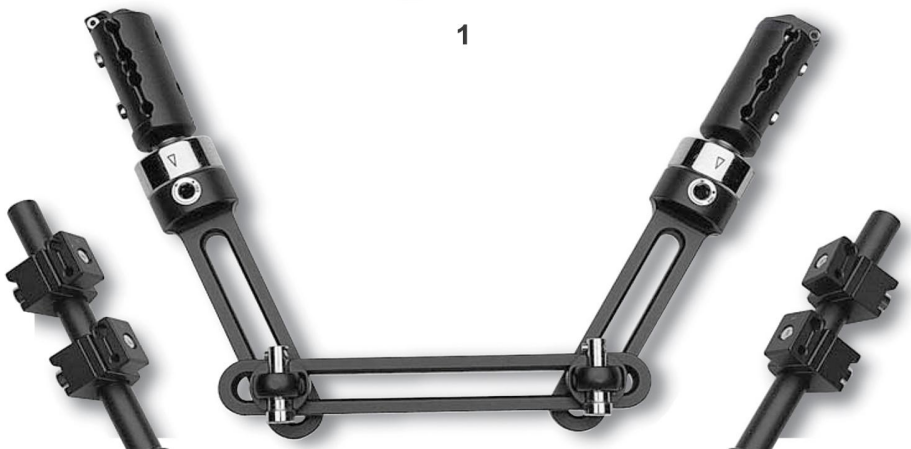

2

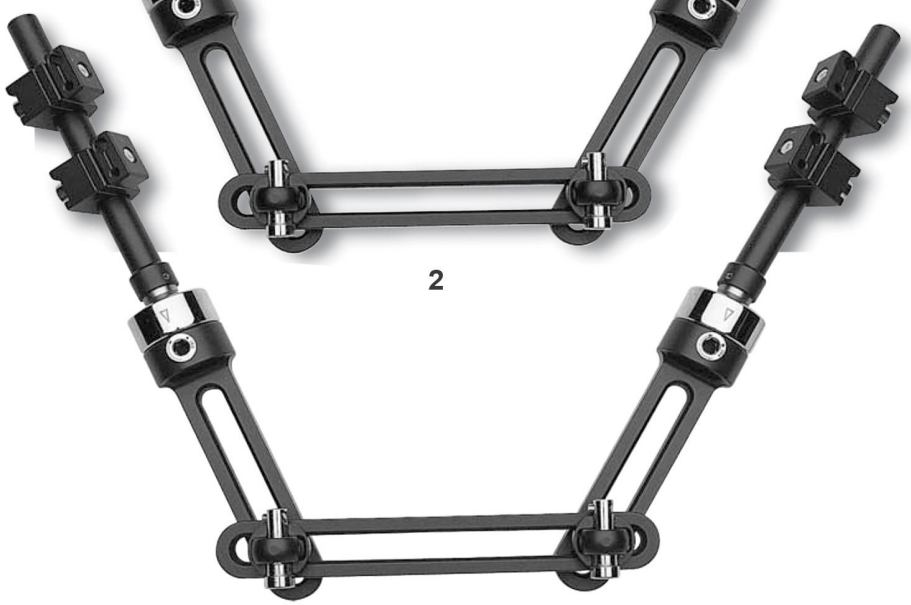

3

Ball-Jointed Modules

4

5

1 DA16
D301 Pelvic Short-(235-305mm)
T-Clamps
Consisting of: 2 Primary Links,
1 Pelvic Fixator Connecting Unit,
2 Cams,2 Bushes,
2 T-Clamps and 1 Allen Wrench 6 mm.

2 DA17
D302 Pelvic Long-530mm (420-535mm)
Straight Clamps
Consisting of: 2 Primary Links,
1 Pelvic Fixator Supplementary Link
1 Pelvic Fixator Connecting Unit,
2 Cams,2 Bushes,
2 Straight Clamps and 1 Allen Wrench 6 mm.

3 DA17
D307 Pelvic long Carbon Clamp and Rod(510-620mm)
Modules for independent Screw Placement
Consisting of: 2 Primary Links
1 Pelvic Fixator Supplementary Link
1 Pelvic Fixator Connecting Unit,
2 Cams,2 Bushes, 2 Ball-Jointed Modules for independent Screw Placement and 1 Allen Wrench 6 mm.

4 DA2
D1002 T-Clamp
For anterior applications.
Acts as its own template for insertion of screws between the inferior and superior iliac spines

5 DA1
D1001 Straight Clamp
For iliac crest applications.
Acts as its own template for insertion of screws into the iliac crest.

Elbow Fixator

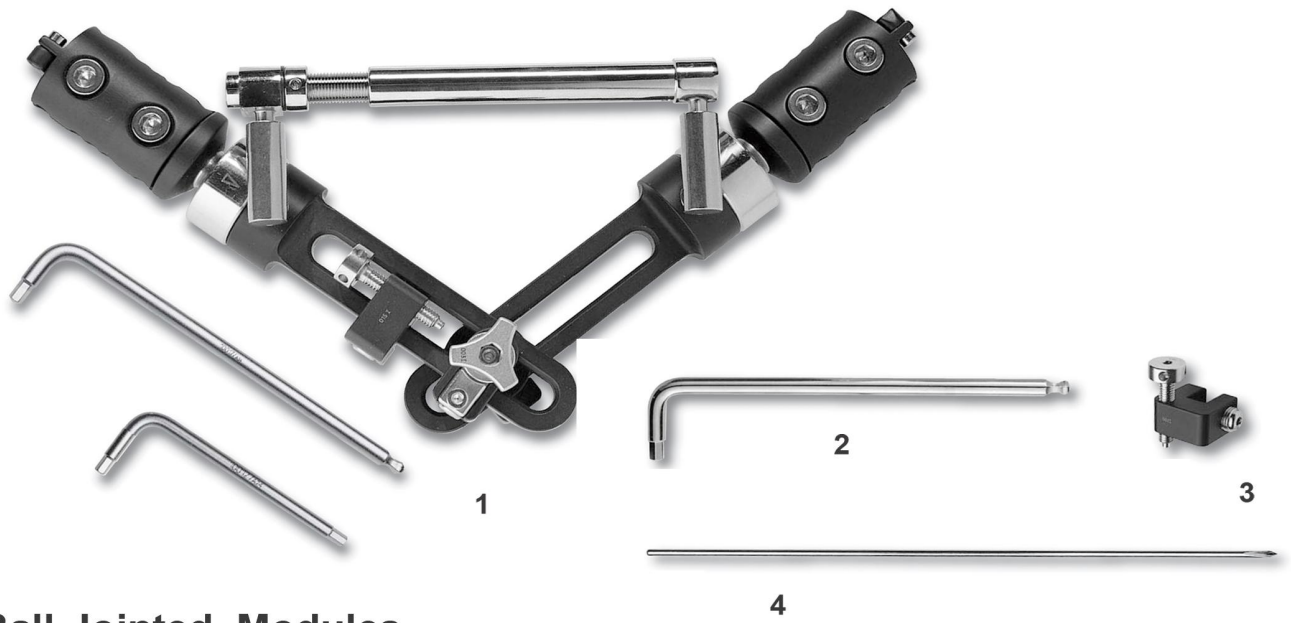

Ball-Jointed Modules

5

6

1 DA18
D305 Elbow Fixator With Straight Clamps
Consisting of: 2 Primary Links,
1 Elbow Fixator Central Connecting Unit,
2 Cams,2 Bushes,
1 Elbow Fixator Small Distractor,
2 Straight Clamps,
1 pair of Elbow Fixator Compression-Distraction Unit Spacers, 1 Long Compression-Distraction Unit,
1 Allen Wrench 6 mm and 1 Allen Wrench 3 mm.

2
Allen Wrench
G10012 3mm
G10017 6mm

3
D3009 Elbow Fixator Spacer

4
SHO20150
K-Wire Without Olive Ø 2mm
Length 150mm

5 DA1
D1007 Straight Clamp
Acts as its own template for insertion of screws in the humerus and ulna.

6
D3001 Elbow Extended Range Clamp
Acts as its own template for screw insertion in the ulna. It is used when a wider choice of angle for screw placement is necessary.

Pertrochanteric Fixator

1

1
D120 Pertrochanteric Fixator
complete with Allen Wrench 5mm

General Instruments

1

2

3

4

5

6

7

1
G11101 Screw Guide 80mm
G11102 Screw Guide 60mm
G11103 Screw Guide 100mm
G11124 Screw Guide 160mm

2
G11104 Ø4.8 Drill Guide 40mm
G11106 Ø3.2 Drill Guide 40mm

3
G11004 Ø4.8 mm Tapered trocar 195mm
G11129 Ø4.8 mm Tapered trocar 240mm
G13540 Tapered trocar(for wrist fixator)

4
G1100701 Ø4.8mm Drill Bit 220mm
G1100301 Ø3.2mm Drill Bit 200mm
G1100401 Ø2.7mm Drill Bit 120mm
G1355101 Ø2.0mm Drill Bit 120mm

5
G1355102 2.0mm Drill Stop
G1100302 3.2mm Drill Stop
G1100702 4.8mm Drill Stop

6
G11000 T-wrench 6mm
G21000 T-wrench 4mm

7
G10017 Allen wrench 6mm
G30017 Allen wrench 5mm
G10013 Allen wrench 4mm
G10012 Allen wrench 3mm

Hybrid Fixator System

1

2

3

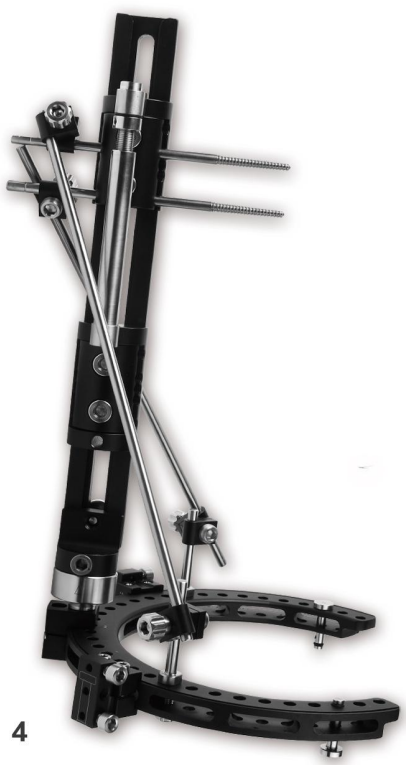

4

1 ZA6
H825 Hybrid Basic Frame L(120mm)
H826 Hybrid Basic Frame M(120mm)
H827 Hybrid Basic Frame S(120mm)
H802 Hybrid Basic Frame L(150mm)
H803 Hybrid Basic Frame M(150mm)
H804 Hybrid Basic Frame S(150mm)
H805 Hybrid Basic Frame L(175mm)
H806Hybrid Basic Frame M(175mm)
H807 Hybrid Basic Frame S(175mm)
H808 Hybrid Basic Frame L(190mm)
H809Hybrid Basic Frame M(190mm)
H810 Hybrid Basic Frame S(190mm)
H811 Hybrid Basic Frame L(220mm)
H812 Hybrid Basic Frame M(220mm)
H813 Hybrid Basic Frame S(220mm)

Consisting of :1 2/3 Ring, 2 Two-Hole K-Wire Securing Pins,2 Three-Hole Wire Clamp Slider Units, 1 Micromovement Central body(Short or Standard), 1 Micromovement Straight Clamp , 1 Hybrid Coupling with Ball-Joint, 2 Posts,2 Supplementary Screw Holder Bars,4 Supplementary Screw Holder Clamps.

2 HA5
Sheffield Ring Fixator Assembly For Reconstruction
Please find the relative components in Page 20.

3 HA5
Sheffield Ring Fixator Assembly for Reconstruction
Please find the relative components in Page 20.

4 ZS7
H831 Hybrid fixator II (400XØ120mm)
H832 Hybrid fixator II (300XØ120mm)
H833 Hybrid fixator II (230XØ120mm)
H834 Hybrid fixator II (400XØ150mm)
H835 Hybrid fixator II (300XØ150mm)
H836 Hybrid fixator II (230XØ150mm)
H837 Hybrid fixator II (400XØ175mm)
H838 Hybrid fixator II (300XØ175mm)
H839 Hybrid fixator II (230XØ175mm)
H840 Hybrid fixator II (400XØ190mm)
H841 Hybrid fixator II (300XØ190mm)
H842 Hybrid fixator II (230XØ190mm)
H843 Hybrid fixator II (400XØ220mm)
H844 Hybrid fixator II (300XØ220mm)
H845 Hybrid fixator II (230XØ220mm)

Components/Replacements

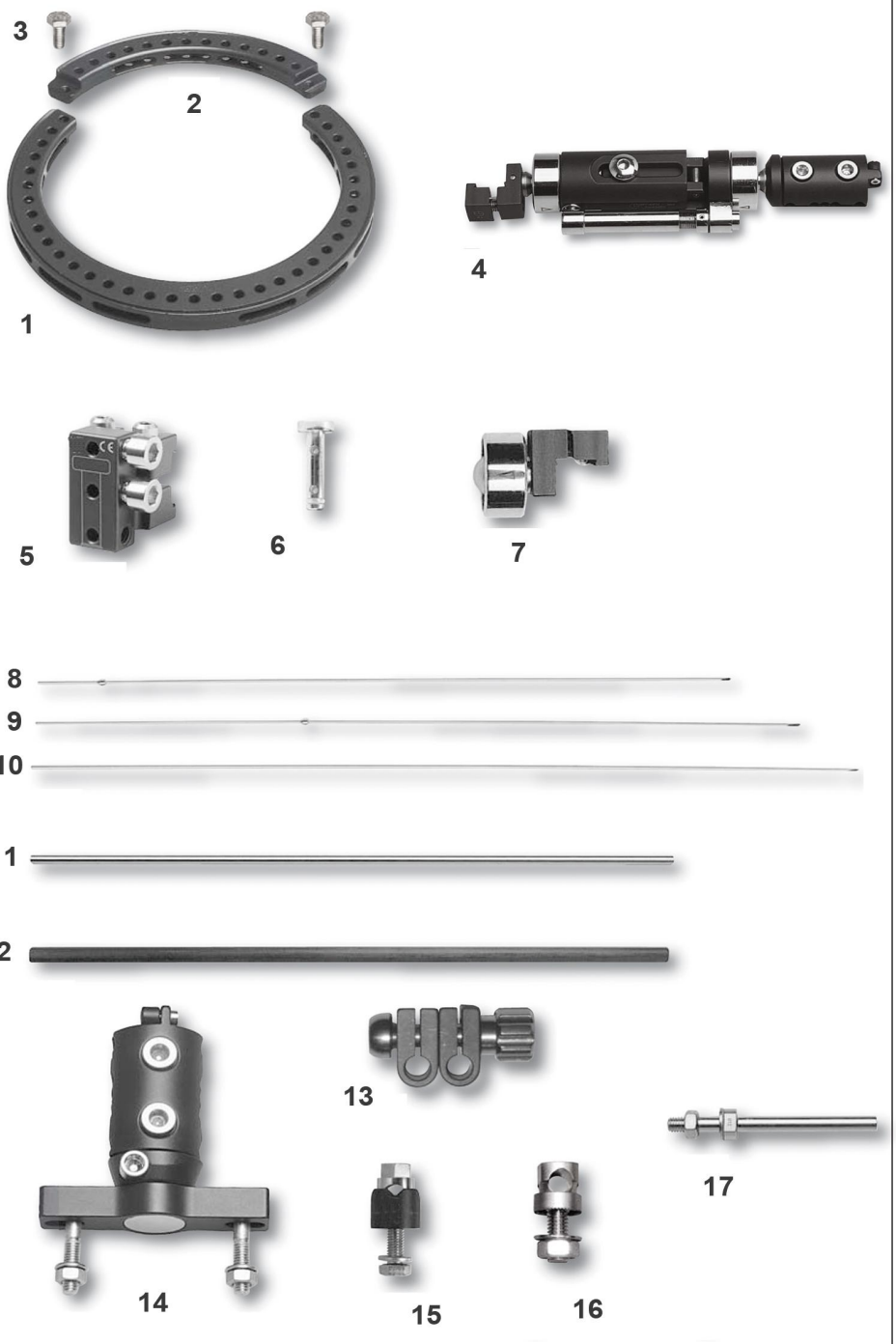

1 ZA6005
2/3 Rings
H7001 inner Ø 150mm
H7002 inner Ø 175mm
H7003 inner Ø 190mm
H7004 inner Ø 220mm
H7153 inner Ø 120mm

2 ZA6005
1/3 Rings
H7154 inner Ø 120mm
H7005 inner Ø 150mm
H7006 inner Ø 175mm
H7007 inner Ø 190mm
H7008 inner Ø 220mm

3
H7012-005
M6x15 Bolts

4
H814 Hybrid Fixator Assembly central units(L)
H815 Hybrid Fixator Assembly central units(M)
H816 Hybrid Fixator Assembly central units(S)

5 ZA6002
H7009 Three Hole Wire Clamp
Should be used with 1 or 2 wires only.

6 ZA6003
H7010 Two Hole Pin Clamp

7 ZA6001
H8001 Hybrid Coupling

8
GNO20400 K-Wire With Lateral Olive Ø2.0X400
GNO20300 K-Wire With Lateral Olive Ø2.0X300
GNO20150 K-Wire With Lateral Olive Ø2.0X150

9
GMO20400 K-Wire With Central Olive Ø2.0X400
GMO20300 K-Wire With Central Olive Ø2.0X300
GMO20150 K-Wire With Central Olive Ø2.0X150

10
SHO20400 K-Wire Without Olive Ø2.0X400
SHO20300 K-Wire Without Olive Ø2.0X300
SHO20150 K-Wire Without Olive Ø2.0X150

11
D6010Cr Screw Holder Bar (300mm)
D6011Cr Screw Holder Bar (200mm)
D6012Cr Screw Holder Bar (100mm)

12
D6010Ts Screw Holder Bar (350mm) Carbon
D6011Ts Screw Holder Bar (250mm) Carbon
D6012Ts Screw Holder Bar (150mm) Carbon

13 ZS2001
D6028 Supplementary Screw Holder Clamp

14 DA1001
H7013 Sheffield Clamp

15 ZA6003
H7088 Single Screw Clamp

16
H7240 Half Pin Fixation Bolt

17 ZA6004
H7167 Post 100mm
H7168 Post 150mm

18

19

20

21

Components/Replacements

22

23

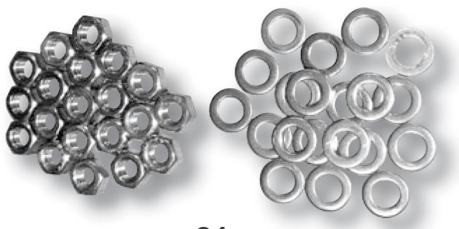

24

Instrumentation

1

2

3

4

5

18
H7238 L-type Extension Plate

19
H7221 Hinge Clamp

20 HA1001
H7140 Threaded Rod 60mm
H7142 Threaded Rod 110mm
H7144 Threaded Rod 150mm
H7146 Threaded Rod 200mm
H7148 Threaded Rod 300mm
H7150 Threaded Rod 400mm

21
D1116 Distractor Advanced(L) 8cm
D1117 Distractor Advanced(M) 4cm
D1118 Distractor Advanced(S) 2cm

22
H7201 Self-Lengthen Rod Distractor-Double Ring

23
H7198 Bolts(set of 10)

24
H7199 Nuts and Washers

1
G18002 Wire Guide

2
G10017 Allen Wrench 6mm
G30017 Allen Wrench 5mm
G10013 Allen Wrench 4mm
G10012 Allen Wrench 3mm

3
G81031 Speed Wrench

4
G18001 2.0mm Wire Tensioner

5
G20018
Ø2.0 Thumbwheel for K-Wire

1

1
Rod to Pin Fixator

2
Rods

3 ZS2001
D6025 14mm Rod Clip Clamp

4 ZS1002
D6029 14mm Pin Clip Clamp

5
D6028 6mm Rod to Pin/Rod Clamp

6
G30017 Allen Wrench 5mm

Components/Replacements and Template

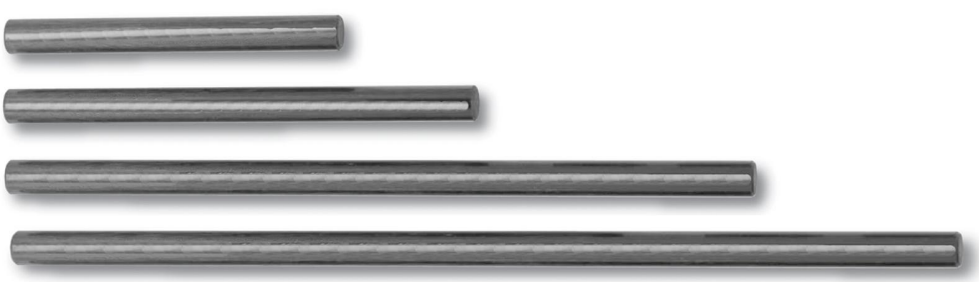

2

3

4

5

Instrumentation

6

TK–Ilizarov Ring System

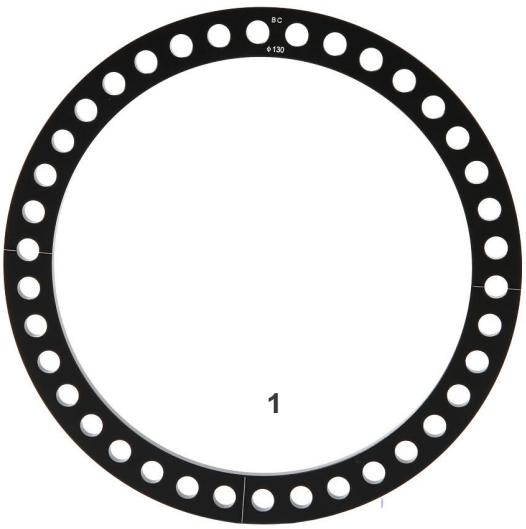

1

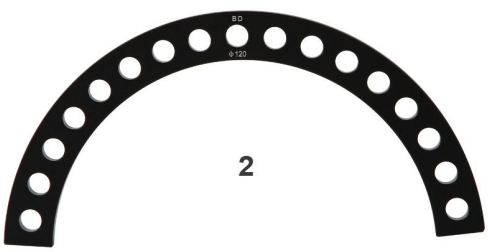

2

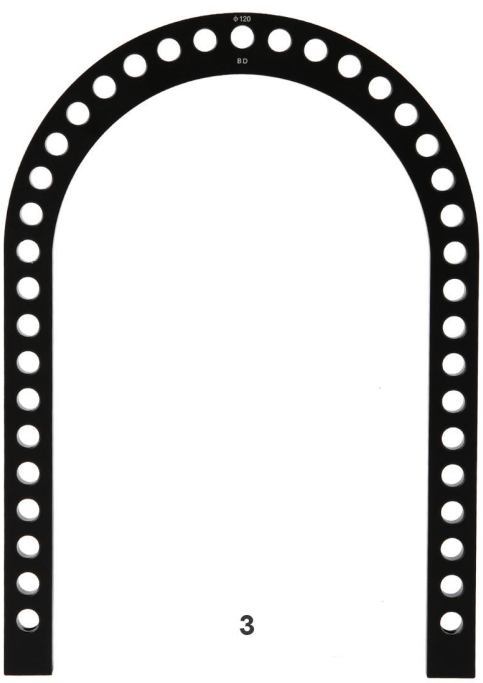

3

1 HA2003
H7014 Full Ring 80mm
H7015 Full Ring 100mm
H7016 Full Ring 120mm
H7017 Full Ring 130mm
H7018 Full Ring 140mm
H7019 Full Ring 150mm
H7020 Full Ring 160mm
H7021 Full Ring 170mm
H7022 Full Ring 180mm
H7023 Full Ring 200mm
H7024 Full Ring 220mm
H7025 Full Ring 240mm

Paediatric
H7074 Mini Full Ring 45mm
H7075 Mini Full Ring 60mm
H7076 Mini Full Ring 80mm

2
H7028 Half Ring For Foot Plate 120mm
H7031 Half Ring For Foot Plate 150mm
H7033 Half Ring For Foot Plate 170mm
H7035 Half Ring For Foot Plate 200mm

Paediatric
H7077 Mini Half Ring 45mm
H7078 Mini Half Ring 60mm
H7079 Mini Half Ring 80mm

3
H7040 Foot Plate 120mm
H7043 Foot Plate 150mm
H7045 Foot Plate 170mm
H7047 Foot Plate 200mm

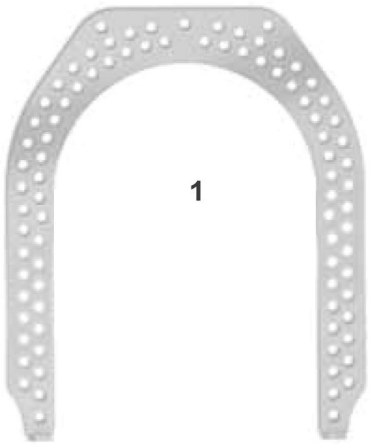
1

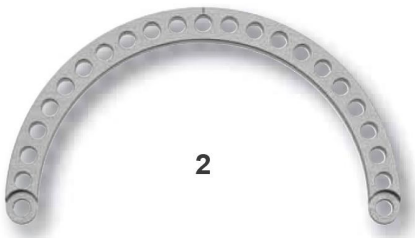
2

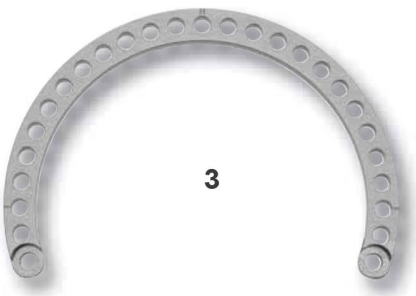
3

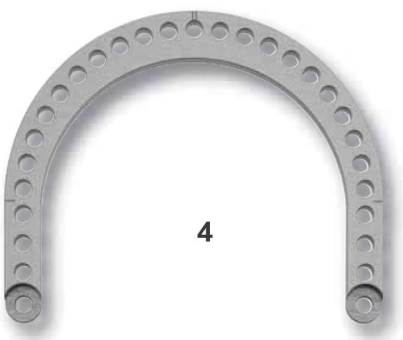
4

5

6

1
H7106 Double Row Foot Plate 150-170mm
H7107 Double Row Foot Plate 160-180mm
H7109 Double Row Foot Plate 180-200mm

2
H7326 Half Ring 80mm
H7327 Half Ring 100mm
H7328 Half Ring 120mm
H7329 Half Ring 130mm
H7330 Half Ring 140mm
H7331 Half Ring 150mm
H7332 Half Ring 160mm
H7333 Half Ring 170mm
H7334 Half Ring 180mm
H7335 Half Ring 200mm
H7336 Half Ring 220mm
H7337 Half Ring 240mm

3
H7062 2/3 Ring 80mm
H7063 2/3 Ring 100mm
H7064 2/3 Ring 120mm
H7065 2/3 Ring 130mm
H7066 2/3 Ring 140mm
H7067 2/3 Ring 150mm
H7068 2/3 Ring 160mm
H7069 2/3 Ring 170mm
H7070 2/3 Ring 180mm
H7071 2/3 Ring 200mm
H7072 2/3 Ring 220mm
H7073 2/3 Ring 240mm

4
H7338 Foot Plate-II 80mm
H7339 Foot Plate-II 100mm
H7340 Foot Plate-II 120mm
H7341 Foot Plate-II 130mm
H7342 Foot Plate-II 140mm
H7343 Foot Plate-II 150mm
H7344 Foot Plate-II 160mm
H7345 Foot Plate-II 170mm
H7346 Foot Plate-II 180mm
H7347 Foot Plate-II 200mm
H7348 Foot Plate-II 220mm
H7349 Foot Plate-II 240mm

5
H7086 Foot Plate Extension 3-Hole
H7087 Foot Plate Extension 5-Hole

6
H7050 1/3 Ring 80mm
H7051 1/3 Ring 100mm
H7052 1/3 Ring 120mm
H7053 1/3 Ring 130mm
H7054 1/3 Ring 140mm
H7055 1/3 Ring 150mm
H7056 1/3 Ring 160mm
H7057 1/3 Ring 170mm
H7058 1/3 Ring 180mm
H7059 1/3 Ring 200mm
H7060 1/3 Ring 220mm
H7061 1/3 Ring 240mm

Hings, Distractors and Connections

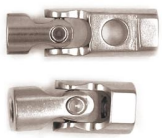
1

2

3

4

5

6

7

8

Fixation Elements

9

10

11

12

13

14

15

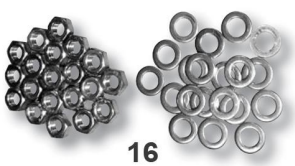
16

17

18

19

Instrumentation

20

21

22

23

24

25

26

1
H7043/NT Universal Hinge(L)
H7151/NT Universal Hinge(S)

2 HA2001
H7122 Inline Hinge 110mm
H7120 Inline Hinge 60mm

3
H7050-001 20mm Plate
H7051-001 30mm Plate
H7052-001 40mm Plate
H7053-001 50mm Plate

4
H7211 Self-Lengthen Rod Distractor -70mm
H7212 Self-Lengthen Rod Distractor -100mm
H7213 Self-Lengthen Rod Distractor -150mm
H7214 Self-Lengthen Rod Distractor -200mm

5 H7231 Oblique Support Rod

6 HA1001
H7140 Threaded Rod 60mm
H7142 Threaded Rod 110mm
H7144 Threaded Rod 150mm
H7146 Threaded Rod 200mm
H7148 Threaded Rod 300mm
H7150 Threaded Rod 400mm

7 HA2002
H7136 Angular Distractor(S)
H7137Angular Distractor(L)

8
H7236 Express Distractor 150mm
H7237 Express Distractor 100mm

9
GNO20400 K-Wire With Lateral Olive Ø2.0X400
GNO20300 K-Wire With Lateral Olive Ø2.0X300
GNO20150 K-Wire With Lateral Olive Ø2.0X150

10
GMO20400 K-Wire With Central Olive Ø2.0X400
GMO20300 K-Wire With Central Olive Ø2.0X300
GMO20150 K-Wire With Central Olive Ø2.0X150

11
SHO20400 K-Wire Without Olive Ø2.0X400
SHO20300 K-Wire Without Olive Ø2.0X300
SHO20150 K-Wire Without Olive Ø2.0X150

12 H7135 2.0mm Wire Fixation Bolt

13 H7124 Half Pin Fixation Bolt

14
H7126 1 Hole Post
H7127 2 Hole Post
H7128 3 Hole Post
H7129 4 Hole Post

15
G12001 Covers For Half Pins
G12002 Covers For Ø4 Pins
G12003 Covers For 2.0 Wires

16 H7199 Nuts & Washs (Set of 20)

17 H7114-001 Slotted Washers(Set of 10)

18 H7197 Bolts (Set of 10)

19 H7240 Half Pin Fixation Bolt Φ5-6

20
G10017 Allen Wrench 6mm
G30017 Allen Wrench 5mm
G10013 Allen Wrench 4mm
G10012 Allen Wrench 3mm

21 G81031 Speed Wrench

22 G521061 Wrench With Double Open Ends

23 G18001 2.0mm Wire Tensioner

24 G18005 Tubular Wrench

25 G10022 3mm Ease Handle Wrench

26 G18001-II 2.0mm Wire Tensioner-II

Self tapping 6mm

Shaft diameter Ø6mm. Thread diameter Ø5.0~6.0mm. Using a Ø4.8mm drill bit for pre-drilling.

Screw Code	Shaft	Thread Length	Total Length	Thread
PLT603090(5060)	6mm	30mm	90mm	5.0-6.0mm
PLT604090(5060)	6mm	40mm	90mm	5.0-6.0mm
PLT6030100(5060)	6mm	30mm	100mm	5.0-6.0mm
PLT6040100(5060)	6mm	40mm	100mm	5.0-6.0mm
PLT6050100(5060)	6mm	50mm	100mm	5.0-6.0mm
PLT6030110(5060)	6mm	30mm	110mm	5.0-6.0mm
PLT6040110(5060)	6mm	40mm	110mm	5.0-6.0mm
PLT6050110(5060)	6mm	50mm	110mm	5.0-6.0mm
PLT6030120(5060)	6mm	30mm	120mm	5.0-6.0mm
PLT6040120(5060)	6mm	40mm	120mm	5.0-6.0mm
PLT6050120(5060)	6mm	50mm	120mm	5.0-6.0mm
PLT6030130(5060)	6mm	30mm	130mm	5.0-6.0mm
PLT6040130(5060)	6mm	40mm	130mm	5.0-6.0mm
PLT6050130(5060)	6mm	50mm	130mm	5.0-6.0mm
PLT6030140(5060)	6mm	30mm	140mm	5.0-6.0mm
PLT6040140(5060)	6mm	40mm	140mm	5.0-6.0mm
PLT6050140(5060)	6mm	50mm	140mm	5.0-6.0mm
PLT6030150(5060)	6mm	30mm	150mm	5.0-6.0mm
PLT6040150(5060)	6mm	40mm	150mm	5.0-6.0mm
PLT6050150(5060)	6mm	50mm	150mm	5.0-6.0mm
PLT6060150(5060)	6mm	60mm	150mm	5.0-6.0mm
PLT6070150(5060)	6mm	70mm	150mm	5.0-6.0mm
PLT6050160(5060)	6mm	50mm	160mm	5.0-6.0mm
PLT6070160(5060)	6mm	70mm	160mm	5.0-6.0mm
PLT6040170(5060)	6mm	40mm	170mm	5.0-6.0mm
PLT6060170(5060)	6mm	60mm	170mm	5.0-6.0mm
PLT6080170(5060)	6mm	80mm	170mm	5.0-6.0mm
PLT6030180(5060)	6mm	30mm	180mm	5.0-6.0mm
PLT6040180(5060)	6mm	40mm	180mm	5.0-6.0mm
PLT6050180(5060)	6mm	50mm	180mm	5.0-6.0mm
PLT6060180(5060)	6mm	60mm	180mm	5.0-6.0mm
PLT6070180(5060)	6mm	70mm	180mm	5.0-6.0mm
PLT6050190(5060)	6mm	50mm	190mm	5.0-6.0mm
PLT6060190(5060)	6mm	60mm	190mm	5.0-6.0mm
PLT6030200(5060)	6mm	30mm	200mm	5.0-6.0mm
PLT6040200(5060)	6mm	40mm	200mm	5.0-6.0mm
PLT6050200(5060)	6mm	50mm	200mm	5.0-6.0mm
PLT6060200(5060)	6mm	60mm	200mm	5.0-6.0mm
PLT6070200(5060)	6mm	70mm	200mm	5.0-6.0mm
PLT6080200(5060)	6mm	80mm	200mm	5.0-6.0mm
PLT6050220(5060)	6mm	50mm	220mm	5.0-6.0mm
PLT6060220(5060)	6mm	60mm	220mm	5.0-6.0mm
PLT6070220(5060)	6mm	70mm	220mm	5.0-6.0mm
PLT6080220(5060)	6mm	80mm	220mm	5.0-6.0mm

Self tapping 6mm

Shaft diameter Ø6mm. Thread diameter Ø3.5~4.5mm. Using a Ø3.2mm drill bit for pre-drilling.

Screw Code	Shaft	Thread Length	Total Length	Thread
PLT6030100(3545)	6mm	30mm	100mm	3.5-4.5mm
PLT6040100(3545)	6mm	40mm	100mm	3.5-4.5mm
PLT6040110(3545)	6mm	40mm	110mm	3.5-4.5mm
PLT6030120(3545)	6mm	30mm	120mm	3.5-4.5mm
PLT6040120(3545)	6mm	40mm	120mm	3.5-4.5mm

Self tapping 4mm(For wrist)

Shaft diameter Ø4mm. Thread diameter Ø3.0~3.3mm. Using a Ø2.7mm drill bit for pre-drilling.

Screw Code	Shaft	Thread Length	Total Length	Thread
PLT402070(3033)	4mm	20mm	70mm	3.0-3.3mm
PLT403580(3033)	4mm	35mm	80mm	3.0-3.3mm

Self tapping 4mm(For wrist)

Shaft diameter Ø4mm. Thread diameter Ø2.5~3.0mm. Using for metacarpal less than 9mm.

Screw Code	Shaft	Thread Length	Total Length	Thread
PLT402070(2530)	4mm	20mm	70mm	2.5-3.0mm
PLT403580(2530)	4mm	35mm	80mm	2.5-3.0mm

Self tapping & drilling 6mm

Shaft diameter Ø6mm. Thread diameter Ø5.0~6.0mm. Using a Ø4.8mm drill bit for pre-drilling.

Screw Code	Shaft	Thread Length	Total Length	Thread
ZLO6020110(5060)	6mm	20mm	110mm	5.0-6.0mm
ZLO6030110(5060)	6mm	30mm	110mm	5.0-6.0mm
ZLO6030120(5060)	6mm	30mm	120mm	5.0-6.0mm
ZLO6050120(5060)	6mm	50mm	120mm	5.0-6.0mm
ZLO6030130(5060)	6mm	30mm	130mm	5.0-6.0mm
ZLO6050130(5060)	6mm	50mm	130mm	5.0-6.0mm
ZLO6060130(5060)	6mm	60mm	130mm	5.0-6.0mm
ZLO6050140(5060)	6mm	50mm	140mm	5.0-6.0mm
ZLO6030150(5060)	6mm	30mm	150mm	5.0-6.0mm
ZLO6040150(5060)	6mm	40mm	150mm	5.0-6.0mm
ZLO6050150(5060)	6mm	50mm	150mm	5.0-6.0mm
ZLO6060150(5060)	6mm	60mm	150mm	5.0-6.0mm
ZLO6040180(5060)	6mm	40mm	180mm	5.0-6.0mm
ZLO6060180(5060)	6mm	60mm	180mm	5.0-6.0mm
ZLO6040200(5060)	6mm	40mm	200mm	5.0-6.0mm
ZLO6050200(5060)	6mm	50mm	200mm	5.0-6.0mm
ZLO6060200(5060)	6mm	60mm	200mm	5.0-6.0mm
ZLO6040220(5060)	6mm	40mm	220mm	5.0-6.0mm
ZLO6050220(5060)	6mm	50mm	220mm	5.0-6.0mm
ZLO6060220(5060)	6mm	60mm	220mm	5.0-6.0mm
ZLO6070220(5060)	6mm	70mm	220mm	5.0-6.0mm
ZLO6080250(5060)	6mm	80mm	250mm	5.0-6.0mm

Self tapping & drilling 6mm

Shaft diameter Ø6mm. Thread diameter Ø3.5~4.5mm. Using a Ø3.2mm drill bit for pre-drilling.

Screw Code	Shaft	Thread Length	Total Length	Thread
ZLO6020110(3545)	6mm	20mm	110mm	3.5-4.5mm
ZLO6030120(3545)	6mm	30mm	120mm	3.5-4.5mm
ZLO6040120(3545)	6mm	40mm	120mm	3.5-4.5mm
ZLO6040150(3545)	6mm	40mm	150mm	3.5-4.5mm
ZLO6040180(3545)	6mm	40mm	180mm	3.5-4.5mm
ZLO6050180(3545)	6mm	50mm	180mm	3.5-4.5mm
ZLO6040200(3545)	6mm	40mm	200mm	3.5-4.5mm
ZLO6050200(3545)	6mm	50mm	200mm	3.5-4.5mm
ZLO6060200(3545)	6mm	60mm	200mm	3.5-4.5mm

Self tapping & drilling

4mm(For wrist)

Shaft Ø4mm. Thread Ø3.0~3.3mm.

Screw Code	Shaft	Thread Length	Total Length	Thread
ZLO402070(3033)	4mm	20mm	70mm	3.0-3.3mm
ZLO403070(3033)	4mm	30mm	70mm	3.0-3.3mm
ZLO403570(3033)	4mm	35mm	70mm	3.0-3.3mm
ZLO4030100(3033)	4mm	30mm	100mm	3.0-3.3mm

Self tapping & drilling

4mm(For wrist)

Shaft Ø4mm. Thread Ø2.5~3.0mm. Using for metacarpal less than 9mm.

Screw Code	Shaft	Thread Length	Total Length	Thread
ZLO402070(2530)	4mm	20mm	70mm	2.5-3.0mm
ZLO403580(2530)	4mm	35mm	80mm	2.5-3.0mm

Self tapping & drilling

2mm (For Mini fixator & Mini Rail fixator)

Screw Code	Shaft	Thread Length	Total Length
SLO2015100	2mm	15mm	100mm
SLO18760	1.8mm	7mm	60mm

K-wire 2mm (For Ilizarov ring)

GMO20200	K-wire with central olive 200mm	Ø2mm
GMO20300	K-wire with central olive 300mm	Ø2mm
GMO20350	K-wire with central olive 350mm	Ø2mm
GMO20400	K-wire with central olive 400mm	Ø2mm
GNO20200	K-wire with lateral olive 200mm	Ø2mm
GNO20300	K-wire with lateral olive 300mm	Ø2mm
GNO20350	K-wire with lateral olive 350mm	Ø2mm
GNO20400	K-wire with lateral olive 400mm	Ø2mm
SHO20200	K-wire without olive 200mm	Ø2mm
SHO20300	K-wire without olive 300mm	Ø2mm
SHO20350	K-wire without olive 350mm	Ø2mm
SHO20400	K-wire without olive 400mm	Ø2mm

Hydroxyapatite screw *

Screw Code	Shaft	Thread Length	Total Length	Thread
HA1-PLT6050180(5060)	6mm	50mm	180mm	5.0-6.0mm
HA1-PLT6040170(5060)	6mm	40mm	170mm	5.0-6.0mm
HA1-PLT6030150(5060)	6mm	30mm	150mm	5.0-6.0mm
HA1-PLT6040150(5060)	6mm	40mm	150mm	5.0-6.0mm
HA1-PLT6050130(5060)	6mm	50mm	130mm	5.0-6.0mm
HA1-PLT6040130(5060)	6mm	40mm	130mm	5.0-6.0mm
HA1-PLT6030120(3545)	6mm	30mm	120mm	3.5-4.5mm
HA1-PLT6030110(5060)	6mm	30mm	110mm	5.0-6.0mm

* For a wider selection please contact your local Rep.

ZS9 Upper Limbs

1
ZS92001 Rod to rod coupling

2
ZS92002 Pin to rod coupling

3
ZS92012 Inverted pin to rod coupling

4
ZS92003 Double pin to rod coupling

5
ZS92013
Inverted double pin to rod coupling

6
ZS91004 5 hole pin clamp

7
ZS91002 Multi-pin clamp

8
ZS91003 Joint clamp

9
ZS93003 30° angled post

10
ZS93001 Straight post

11
ZS99001 Connecting rod for elbow(short)

12
ZS99002 Connecting rod for elbow(long)

13
ZS99003 Connecting rod for wrist

Upper Limbs:Rod&Instruments

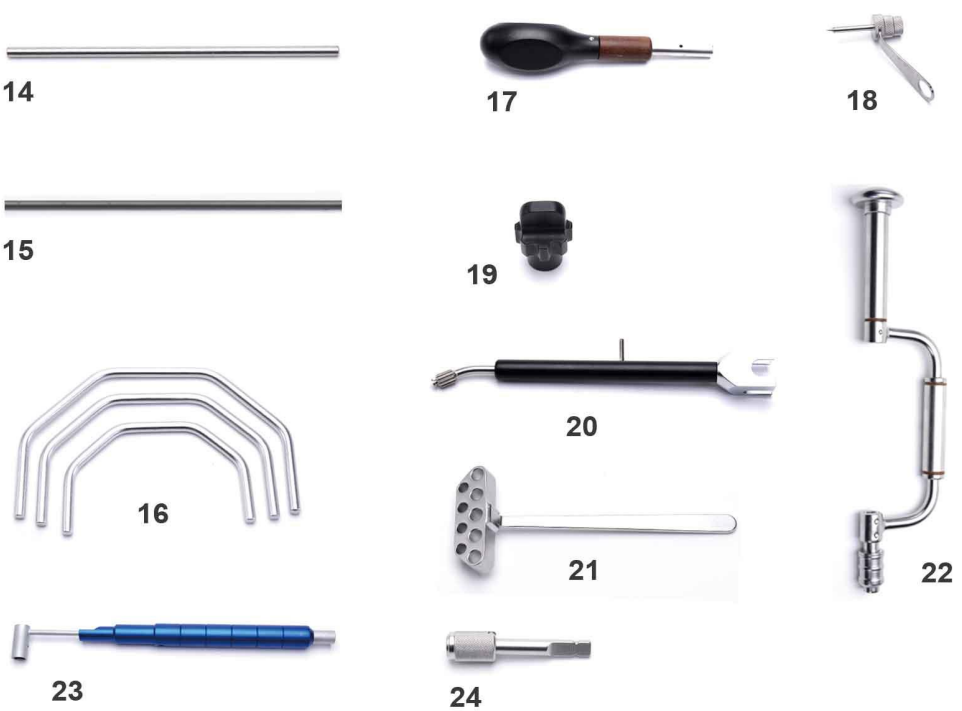

14
ZS95050 SS connecting rod Ø5x50
ZS95100 SS connecting rod Ø5x100
ZS95150 SS connecting rod Ø5x150
ZS95200 SS connecting rod Ø5x200
ZS95250 SS connecting rod Ø5x250

15
ZS96050 Carbon connecting rod Ø5x50
ZS96100 Carbon connecting rod Ø5x100
ZS96150 Carbon connecting rod Ø5x150
ZS96200 Carbon connecting rod Ø5x200
ZS96250 Carbon connecting rod Ø5x250

16
ZS97001 Semi-circular rod(S)
ZS97002 Semi-circular rod(M)
ZS97003 Semi-circular rod(L)

17
G20002 Hex pin driver Ø3-4mm

18
G20004 Guide for pin

19
G20006-01 Thumbwheel

20
G20008 Reduction wrench

21
G20012 Multi-pin insertion guide

22
G20014 Manual drill handle

23
G20011 Torque limited wrench

24
G20015 Pin holder 3.0
G20016 Pin holder 4.0

ZS8 Lower Limbs

1
ZS82001 Rod to rod coupling

2
ZS82002 Pin to rod coupling

3
ZS82012 Inverted pin to rod coupling

4
ZS82003 Double pin to rod coupling

5
ZS82013
Inverted double pin to rod coupling

6
ZS81001 5 hole pin clamp

7
ZS81002 Multi-pin clamp

8
ZS88001 Dynamization tube(single)

9
ZS83003 30° angled post

10
ZS83001 Straight post

11
ZS89003 Connecting rod for ankle(short)

12
ZS88004 Compression/distraction tube(M)
ZS88014 Compression rod to pin coupling

13
ZS88021 Adjustable tube(short)
ZS88022 Adjustable tube(long)

14
ZS89001 Connecting rod for knee(L)
ZS89002 Connecting rod for knee(R)

15
ZS84150 AL connecting rod Ø8x150
ZS84200 AL connecting rod Ø8x200
ZS84250 AL connecting rod Ø8x250
ZS84300 AL connecting rod Ø8x300
ZS84350 AL connecting rod Ø8x350
ZS84400 AL connecting rod Ø8x400

16
ZS86150 Carbon connecting rod Ø8x150
ZS86200 Carbon connecting rod Ø8x200
ZS86250 Carbon connecting rod Ø8x250
ZS86300 Carbon connecting rod Ø8x300
ZS86350 Carbon connecting rod Ø8x350
ZS86400 Carbon connecting rod Ø8x400

17
ZS87001 Semi-circular rod(S)
ZS87002 Semi-circular rod(M)
ZS87003 Semi-circular rod(L)

18
G20005 Guide for pin 5mm

19
G20006-2 Thumbwheel

20
G20010 T-wrench

21
G20009 Reduction wrench

22
G20012 Multi-pin insertion guide

23
G20011 Torque limited wrench

24
G20014 Manual drill handle

25
G20017 Pin holder 5.0

Lower Limbs:Rod&Instruments

1

2

3

4

5

6

7

8

1
ZS102001 Rod to rod coupling

2
ZS102002 Pin to rod coupling

3
ZS102012 Inverted pin to rod coupling

4
ZS102003 Double pin to rod coupling

5
ZS102013
Inverted double pin to rod coupling

6
ZS101002 Multi-pin clamp

7
ZS106050 Carbon connection rod Ø3x50
ZS106100 Carbon connection rod Ø3x100
ZS106150 Carbon connection rod Ø3x150

8
G20001 Hex pin driver Ø2.0

Pins - Mini

ZLR181045 Ø1.8*45mm Pin
ZLR181050 Ø1.8*50mm Pin
ZLR201045 Ø2.0*45mm Pin
ZLR201250 Ø2.0*50mm Pin

Self Drilling & Tapping Pins - Upper Limbs

ZLR302060 Ø3.0*60mm Pin
ZLR302080 Ø3.0*80mm Pin
ZLR3020100 Ø3.0*100mm Pin
ZLR403080 Ø4.0*80mm Pin
ZLR4030100 Ø4.0*100mm Pin
ZLR4030120 Ø4.0*120mm Pin

Self Drilling & Tapping Pins - Lower Limbs

ZLR5040120 Ø5.0*120mm Pin
ZLR5040150 Ø5.0*150mm Pin
ZLR5050180 Ø5.0*180mm Pin
ZLR5050200 Ø5.0*200mm Pin

Transfixing Pin

SLR5050220-zht 220mm ,central thread length 50mm
SLR5050250-zht 250mm, central thread length 50mm

Mini External Fixation Set

XDH-051 -1

Code	Description	Quantity
D501	Mini fixator(85mm)	1
D502	Mini fixator(75mm)	1
D503	Mini fixator(65mm)	1
D504	Minirail fixator(170mm)	1
D505	Minirail fixator(95mm)	1
D506	Minirail fixator(70mm)	2
D507	Minirail fixator(horizontal axis)	1
D509	Minirail fixator(vertical axis)	1
D511	Minirail fixator(horizontal II)	1
D515	Mini fixator(65mm) with L Clamp	1
G10012	Allen wrench 3mm	4
SLO2015100	2 mm Pins	16
G20018	Ø2.0 Thumbwheel for 2.0 Pins	1
G10022	3 mm Ease Handle Wrench	1
G14001	Reductor for Mini Fixator	2
XDH-0051-1	Mini Fixator Sterilization Container	1

Wrist External Fixation Set

XDH-051 -2

Code	Description	Quantity
D401	Wrist fixator 22m	1
D402	Wrist fixator(compression-distraction) 22mm	1
D403	Wrist fixator(extra-articular) 20mm	1
D4011	Wrist Fixator- Template Conversion Clamp	2
D4002	Ulnar Outrigger Clamp	1
G10012	Allen wrench 3mm	3
G13520	Template with handle (For Wrist)	2
G10022	3 mm Ease Handle Wrench	1
G13531	Ø2.0mm Drill guide(For Wrist)	2
G21000	T-wrench-4mm (For Wrist)	1
G13540	Tapered trocar (For Wrist)	1
G1355101	Ø2.0mm Drill bit 127mm (For Wrist)	2
ZLO402070(3033)	4 mm Pins (For Wrist)	12
ZLO403580(3033)	4 mm Pins (For Wrist)	4
XDH-0051	Wrist fixator Sterilization Container	1

Forearm External Fixation Set XDH-051

Code	Description	Quantity
D501	Mini fixator(85mm)	1
D502	Mini fixator(75mm)	1
D503	Mini fixator(65mm)	1
D505	Minirail fixator(95mm)	1
D506	Minirail fixator(70mm)	1
D509	Minirail fixator(vertical axis)	1
D507	Minirail fixator(horizontal axis)	1
D511	Minirail fixator(horizontal II)	1
D515	Mini fixator(75mm) with L Clamp	1
D504	Minirail fixator(170mm)	1
D401	Wrist fixator 22m	1
D402	Wrist fixator(compression-distraction) 22mm	1
D403	Wrist fixator(extra-articular) 20mm	1
D4002	Ulnar Outrigger Clamp	1
G14001	Reductor for Mini Fixator	2
G10012	Allen wrench 3mm	4
G13520	Template with handle (For Wrist)	2
D4011	Wrist Fixator- Template Conversion Clamp	2
G13531	Ø2.0mm Drill guide(For Wrist)	2
G10022	3 mm Ease Handle Wrench	1
G21000	T-wrench-4mm (For Wrist)	1
G13540	Tapered trocar (For Wrist)	1
G1355101	Ø2.0mm Drill bit 127mm (For Wrist)	2
G20018	Φ2.0 Thumbwheel for 2.0 Pins	1
SLO2015100	2 mm Pins	16
ZLO402070(3033)	4 mm Pins (For Wrist)	12
ZLO403580(3033)	4 mm Pins (For Wrist)	4
XDH-0051	Forearm fixator Sterilization Container	1

Adult Lower Limb External Fixation Set XDH-052

Code	Description	Quantity
D101	Micro movement fixator(long)(310-390mm)	1
D106	Micro movement fixator(middle) T-clamp (230-350mm)	1
D116	Micro movement fixator(short) Ankle-clamp (280-300mm)	1
D1216	Micro movement Actuator L	1
D1217	Micro movement Actuator M	1
D1218	Micro movement Actuator S	1
D120	Pertrochanteric Fixator	1
D1021	Metaphyseal-Clamp	1
D1020	BGT-Clamp	1
D1005	Angled-clamp	1
D302	Pelvic long-530mm (420-535mm)	1
G10017	Allen wrench 6mm	2
G30017	Allen wrench 5mm	2
G11102	Screw guide 60mm	2
G11101	Screw guide 80mm	2
G11103	Screw guide 100mm	4
G11124	Screw guide 160mm	2
G11104	Ø4.8 Drill guide 40mm	2
G1100701	Ø4.8mm Drill bit 280mm	4
G11129	Ø4.8 mm Tapered trocar 240mm	1
G11000	T-wrench	2
G18003	Radiolucente Ankle Guide	1
ZLO6030150(5060)	Schanz Pins -6mm/Thread diameter 5.0~6.0mm/ Thread length 30mm/Total length 150mm	8
ZLO6040180(5060)	Schanz Pins -6mm/Thread diameter 5.0~6.0mm/ Thread length 40mm/Total length 180mm	8
ZLO6050200(5060)	Schanz Pins -6mm/Thread diameter 5.0~6.0mm/ Thread length 50mm/Total length 200mm	8
ZLO6050220(5060)	Schanz Pins -6mm/Thread diameter 5.0~6.0mm/ Thread length 50mm/Total length 220mm	8
XDH-0052	Adult Lower Limb fixator Sterilization Container	1

Paediatric External Fixation Set XDH-053

Code	Description	Quantity
D104	Paediatric fixator-universal(170-220mm)	1
D108	Paediatric fixator with T-clamp	1
D204	Paediatric limb reconstruction fixator(250mm)	1
D205	Paediatric limb reconstruction fixator(200mm)	1
D206	Paediatric limb reconstruction fixator(150mm)	1
D2026	Paediatric LRS Micrometric Swivelling clamp	1
D2047	Paediatric LRS T-Clamp	3
D2049	Padiatric LRS Straight Clamp template	3
D2048	Paediatric Dynamic Unit	1
G30017	Allen wrench 5mm	2
G11004	Ø 4.8 mm Tapered trocar 195mm	1
G11000	T-wrench	2
G11101	Screw guide 80mm	4
G11102	Screw guide 60mm	4
G11106	Ø3.2 Drill guide 40mm	4
G1100301	Ø3.2mm Drill bit 200mm	4
ZLO6030120(3545)	Schanz Pins -6mm/Thread diameter 3.5~4.5mm/ Thread length 30mm/Total length 120mm	8
ZLO6020110(3545)	Schanz Pins -6mm/Thread diameter 3.5~4.5mm/ Thread length 20mm/Total length 110mm	8
XDH-0053	Paediatric Fixator Sterilization Container	1

Adult Limb Reconstruction External Fixation Set XDH-054

Code	Description	Quantity
D201	Adult limb reconstruction fixator(400mm)	1
D202	Adult limb reconstruction fixator(300mm)	1
D203	Adult limb reconstruction fixator(230mm)	1
D2015	LRS T-Clamp	1
D2017	Dynamic Unit	1
D2029	L.R.S. Hinged Rail Coupling	1
D2023	Sandwich Clamp-8mm	1
D2019	LRS Micrometric Swivelling clamp	1
D2021	LRS Multiplanar clamp	1
D2043	LRS Straight Clamp template	3
D2045	LRS T-Clamp template	1
D2050	Of-G T-Clamp	1
D2016	LRS Ball-joing coupling	1
H8001	Hybrid coupling	1
D1020	BGT-Clamp	1
G11101	Screw guide 80mm	4
G11102	Screw guide 60mm	2
G11103	Screw guide 100mm	4
G11000	T-wrench	2
G11129	Ø4.8 mm Tapered trocar 240mm	1
G10017	Allen wrench 6mm	2
G11104	Ø4.8 Drill guide 40mm	8
G1100701	Ø4.8mm Drill bit 280mm	4
D1016	Distractor(long) 8cm	1
D1017	Distractor(middle) 4cm	1
D1018	Distractor(short) 2cm	1
D1027	Of-G Compression & distraction Unit	1
ZLO6040220(5060)	Schanz Pins -6mm	8
ZLO6050200(5060)	Schanz Pins -6mm	8
ZLO6060220(5060)	Schanz Pins -6mm	8
ZLO6040150(5060)	Schanz Pins -6mm	8
XDH-0054	Adult Limb Reconstruction Sterilization Container	1

Radiolucent Wrist complete kit,sterile XDH-D125-1

Code	Description	Quantity
D125	Micro movement fixator radiolucent-wrist	1
G21000	T-wrench	1
G13531	Ø2.0mm Drill guide	2
G13520	Template with handle	1
G10013	Allen wrench 4mm	1
PLT402070(3033)	Schanz Pin 4mm	4
G1355101	Ø2.0mm Drill bit 127mm	1

Radiolucent Ankle complete kit,sterile XDH-D124-1

Code	Description	Quantity
D123	Micro movement fixator radiolucent-Ankle clamp	1
G11102	Screw guide 60mm	1
G11101	Screw guide 80mm	1
G11103	Screw guide 100mm	1
G11104	Ø4.8 Drill guide 40mm	2
G1100701	Ø4.8mm Drill bit 280mm	2
G11000	T-wrench	1
G30017	Allen wrench 5mm	1
G10012	Allen wrench 3mm	1
G18003	Radiolucent Pin Guide for Ankle	1
G11004	Ø 4.8 mm Tapered trocar 195mm	1
ZLO6040180(5060)	Schanz Pin 6mm	6

Radiolucent Metaphyseal complete kit,sterile XDH-D123-1

Code	Description	Quantity
D123	Micro movement fixator T-clamp (240-300mm)	1
G11102	Screw guide 60mm	1
G11101	Screw guide 80mm	1
G11103	Screw guide 100mm	1
G11104	Ø4.8 Drill guide 40mm	2
G1100701	Ø4.8mm Drill bit 280mm	2
G11000	T-wrench	1
G30017	Allen wrench 5mm	1
G10012	Allen wrench 3mm	1
G11004	Ø 4.8 mm Tapered trocar 195mm	1
ZLO6040180(5060)	Schanz Pin 6mm	6

Elbow External Fixation Set XDH-055

Code	Description	Quantity
D305	Elbow fixator (320-390mm)	1
D3001	Elbow Extended Range Clamp	1
D3009	Elbow Fixator Spacer	1
G10017	Allen wrench 6mm	2
G10012	Allen wrench 3mm	2
G11101	Screw guide 80mm	2
G11102	Screw guide 60mm	2
G11000	T-wrench	1
G11004	Ø 4.8 mm Tapered trocar 195mm	1
G11106	Ø3.2 Drill guide 40mm	2
G11104	Ø4.8 Drill guide 40mm	2
G1100301	Ø3.2mm Drill bit 200mm	2
G1100701	Ø4.8mm Drill bit 280mm	2
GN020350	K-wire without lateral olive head-2.0	2
ZLO6040150(5060)	Schanz Pins -6mm	8
ZLO6030120(3545)	Schanz Pins -6mm	8
XDH-0055	Elbow fixator Sterilization Container	1

Ilizarov Ring External Fixation Set XDH-056

Code	Description	Quantity
H7020	Ring 160mm	4
H7021	Ring 170mm	4
H7022	Ring 180mm	4
H7023	Ring 200mm	4
H7058	1/3 Ring 180mm	1
H7059	1/3 Ring 200mm	1
H7031	Half Ring for Foot Plate 150mm	1
H7034	Half Ring for Foot Plate 180mm	1
H7043	Foot Ring 150mm	1
H7046	Foot Ring 180mm	1
H7122	Inline hinge(long)	2
H7120	Inline hinge(Short)	2
H7123	Outboard hinge	2
H7124	Pin bolt 6mm	16
H7135	Pin bolt 2mm	40
H7226	1 hole post	4
H7227	2 hole post	4
H7228	3 hole post	4
H7229	4 hole post	4
H7050-001	20mm plate	4
H7051-002	30mm plate	4
H7052-003	40mm plate	4
H7053-004	50mm plate	4
H7237	Distractor Express(standard)	2
H7236	Distractor Express(long)	2
H7141	Threaded rod 80mm	12
H7144	Threaded rod 150mm	12
H7146	Threaded rod 200mm	12
H7148	Threaded rod 300mm	10
H7197	Bolts (Set of 10)	10
H7199	Nuts & Washs (Set of 20)	20
H7211	Self-lengthen Rod Distractor - 70mm	4
H7212	Self-lengthen Rod Distractor - 100mm	4
H7213	Self-lengthen Rod Distractor - 150mm	4
H7214	Self-lengthen Rod Distractor - 200mm	4
G11101	Screw guide 80mm	1
G11129	Ø4.8 mm Tapered trocar 240mm	1
G1100701	Ø4.8mm Drill bit 280mm	1
G11104	Ø4.8 Drill guide 40mm	1
G18001	2.0mm Wire Tensioner	1
G18002	Wire guide	1
G81031	Speed wrench	2
G521061	Wrench with double open ends	1
G20018	Ø2.0 Thumbwheel for K-Wire	1
G11129	Ø4.8 mm Tapered trocar 240mm	1
G11000	T-wrench	1
ZLO6040150(5060)	Schanz Pins - 6mm	8
SH020350	K-Wire without olive 350mm	16
GMO20350	K-Wire with central olive 350mm	4
BJXDH	Ilizarov Ring fixator Sterilization Container	1

Hoffman Fixator Lower Limbs External Fixation Set XDH-057

Code	Description	Quantity
ZS82001	Rod to Rod Coupling	8
ZS82002	Pin to Rod Coupling	6
ZS82003	Double Pin to Rod Coupling	2
ZS81001	5-Hole Pin Clamp	3
ZS83003	30° Angled Post	6
ZS83001	Straight Post	2
ZS84150	Aluminum Connecting Rod Ø8×150	4
ZS84200	Aluminum Connecting Rod Ø8×200	4
ZS84250	Aluminum Connecting Rod Ø8×250	4
ZS84300	Aluminum Connecting Rod Ø8×300	4
ZS84350	Aluminum Connecting Rod Ø8×350	4
ZS84400	Aluminum Connecting Rod Ø8×400	4
ZS87001	Semi-Circular Rod (S)	1
ZS87002	Semi-Circular Rod (M)	1
ZS87003	Semi-Circular Rod (L)	1
ZSA50-150	5.0 mm /150 mm Pin	16
G20005	Guide for pin-5mm	1
G20006-02	Thumbwheel-8mm	1
G20009	Reduction wrench(Lower Limbs)-8mm	2
G20010	T-Wrench	1
G20011	Torque limited Wrench	1
G20012	Multi-Pin insertion Guide	1
G20014	Manual Drill Handle	1
G20017	Pin Holder 5mm	1
XDH-0057	Hoffman Fixator Lower Limbs Sterilization Container	1

Hoffman Fixator lower Limbs -Basic External Fixation Set

XDH-057-1

Code	Description	Quantity
ZS82001	Rod to Rod Coupling 8mm /8mm	8
ZS82002	Pin to Rod Coupling 8mm /5mm	8
ZS81001	5-Hole Pin Clamp	2
ZS83003	30° Angled Post	4
ZS83001	Straight Post	4
ZS86150	Carbon Rod 150 mm	4
ZS86200	Carbon Rod 200 mm	4
ZS86250	Carbon Rod 250 mm	4
ZS86300	Carbon Rod 300 mm	4
ZS86350	Carbon Rod 350 mm	4
ZS86400	Carbon Rod 400 mm	4
ZSA50-120	5.0 mm /120 mm Pin	6
ZSA50-150	5.0 mm /150 mm Pin	6
ZSA50-180	5.0 mm /180 mm Pin	6
ZSA50-200	5.0 mm /200 mm Pin	6
G20004	Guide for Pin 5mm	1
G20009	Reduction Wrench	2
G20010	T Wrench	1
G20011	Torque limited Wrench	2
G20012	Multi Pin Insertion Guide	1
G20017	Pin Holder 5mm	1
XDH-0057-1	Hoffman Fixator lower Limbs -Basic Sterilization Container	1

Hoffman Fixator Upper Limbs External Fixation Set XDH-058

Code	Description	Quantity
ZS92001	Rod to Rod Coupling	8
ZS92002	Pin to Rod Coupling	6
ZS92003	Double Pin to Rod Coupling	2
ZS91004	4-Hole Pin Clamp	2
ZS93003	30° Angled Post	2
ZS93001	Straight Post	4
ZS95050	SS Connecting Rod Ø5×50	1
ZS95100	SS Connecting Rod Ø5×100	1
ZS95150	SS Connecting Rod Ø5×150	1
ZS95200	SS Connecting Rod Ø5×200	1
ZS95250	SS Connecting Rod Ø5×250	1
ZS97001	Semi-Circular Rod(S)	1
ZS97002	Semi-Circular Rod(M)	1
ZS97003	Semi-Circular Rod(L)	1
ZSA30-80	3.0*80mm Pin	4
ZSA40-120	4.0*120mm Pin	6
G20002	Hex Pin driver (Upper Limbs)-5mm	1
G20004	Guide for pin	1
G20006-01	Thumbwheel	1
G20008	Reduction wrench (Upper Limbs)-5mm	2
G20010	T-Wrench	1
G20012	Multi-Pin insertion Guide	1
G20014	Manual Drill Handle	1
G20015	Pin Holder 3mm	1
G20016	Pin Holder 4mm	1
XDH-0058	Hoffman Fixator Upper Limbs Sterilization Container	1

Hybrid Double Ring External Fixation Set XDH-021

Code	Description	Quantity
H7153	2/3 Double Ring - 120mm	2
H7001	2/3 Double Ring - 150mm	2
H7002	2/3 Double Ring - 175mm	2
H7003	2/3 Double Ring - 190mm	2
H7004	2/3 Double Ring - 220mm	2
H7154	1/3 Double Ring - 120mm	2
H7005	1/3 Double Ring - 150mm	2
H7006	1/3 Double Ring - 175mm	2
H7007	1/3 Double Ring - 190mm	2
H7008	1/3 Double Ring - 220mm	2
H7009	Three Hole Wire Clamp	6
H7010	Two Hole Wire Clamp	6
H7088	Sheffield -Single screw clamp	2
H7013	Sheffield -Ring clamp	1
H7198	Bolts (Set of 10)	10
H7199	Nuts & Washs (Set of 20)	20
H815	Central Bodies with Hybrid Coupling	1
H915	LRS Rail fixator with with Hybrid Coupling M	1
H916	LRS Rail fixator with with Hybrid Coupling S	1
D6028	6mm Screw Holder Clamp	4
H7167	Post-100mm	2
H7168	Post-150mm	2
D6010Cr	6mm Rod (300mm)	2
D6009Cr	6mm Rod (400mm)	2
D6010Ts	6mm Rod (350mm)	2
D6011Ts	6mm Rod (250mm)	2
H7141	Thread Rod 80mm	4
H7144	Thread Rod 150mm	4
H7146	Thread Rod 200mm	4
H7148	Thread Rod 300mm	4
H7150	Thread Rod 400mm	4
H7201	Self lengthen rod for double ring	4
H7221	Sheffiled Hinge Clamp	2
H7238	Extension Plate	2
D1117	Distractor Advanced (M)	2
G10017	Allen wrench 6mm	2
G30017	Allen wrench 5mm	2
G10012	Allen wrench 3mm	2
G11000	T-wrench 6mm	1
G11101	Screw guide 80mm	2
G11103	Screw guide 100mm	2
G11104	Ø4.8 Drill guide 40mm	2
G11004	Ø4.8 mm Tapered trocar 195mm(120mm)	1
G1100701	Ø4.8mm Drill bit 220mm	2
G1100702	4.8mm Drill stop	2
G18001	2.0mm Wire Tensioner	1
G18002	Wire guide	1
G81031	Open end Wrench	2
G20018	Ø2.0 Thumbwheel for K-Wire	1
ZLO6040150(5060)	Schanz Pins - 6m	6
GM020350	K-wire with central Olive,Ø2.0X350	4
GN020350	K-wire with lateral Olive,Ø2.0X350	8
SH020350	K-wire without Olive,Ø2.0X350	4
XDH-0021	Hybrid Double Ring Sterilization Container	1

Aike(Shanghai) Medical Instrument Co., Ltd. was founded in 2009 in Shanghai, China.

Bfix™ is our product brand. We are dedicated to research and manufacture a complete line of Orthopedic External Fixators, offering cost effective and advanced concept products to facilitate surgery, and also bring enhanced comfort to patients.

We sincerely welcome you to join in.

BFIX™

Room 606, No.3388, Gonghexin Road, Shanghai,China
B321, No.1128, South Huicheng Road, Jiading District, Shanghai, China
+86-21-66526503 66308078
+86-21-66527863
manager@aikesh.com
www.bfix.cn